PMI PIN	connection on device without Wipower	connection on device with Wipower
CHG_OK	Pull up to VDD_CAP with 5kohm	Stark PRU CHG_OK
DVI2_EN	Pull down to GND with 0ohm	Stark PRU DVI2_EN
GPIO2	No Connect For parallel charging: Connects to SMB EN pin. Do NOT pull up to VDD_CAP	10Kohm pull down to gnd For parallel charging: Connects to SMB EN pin. Do NOT pull up to VDD_CAP

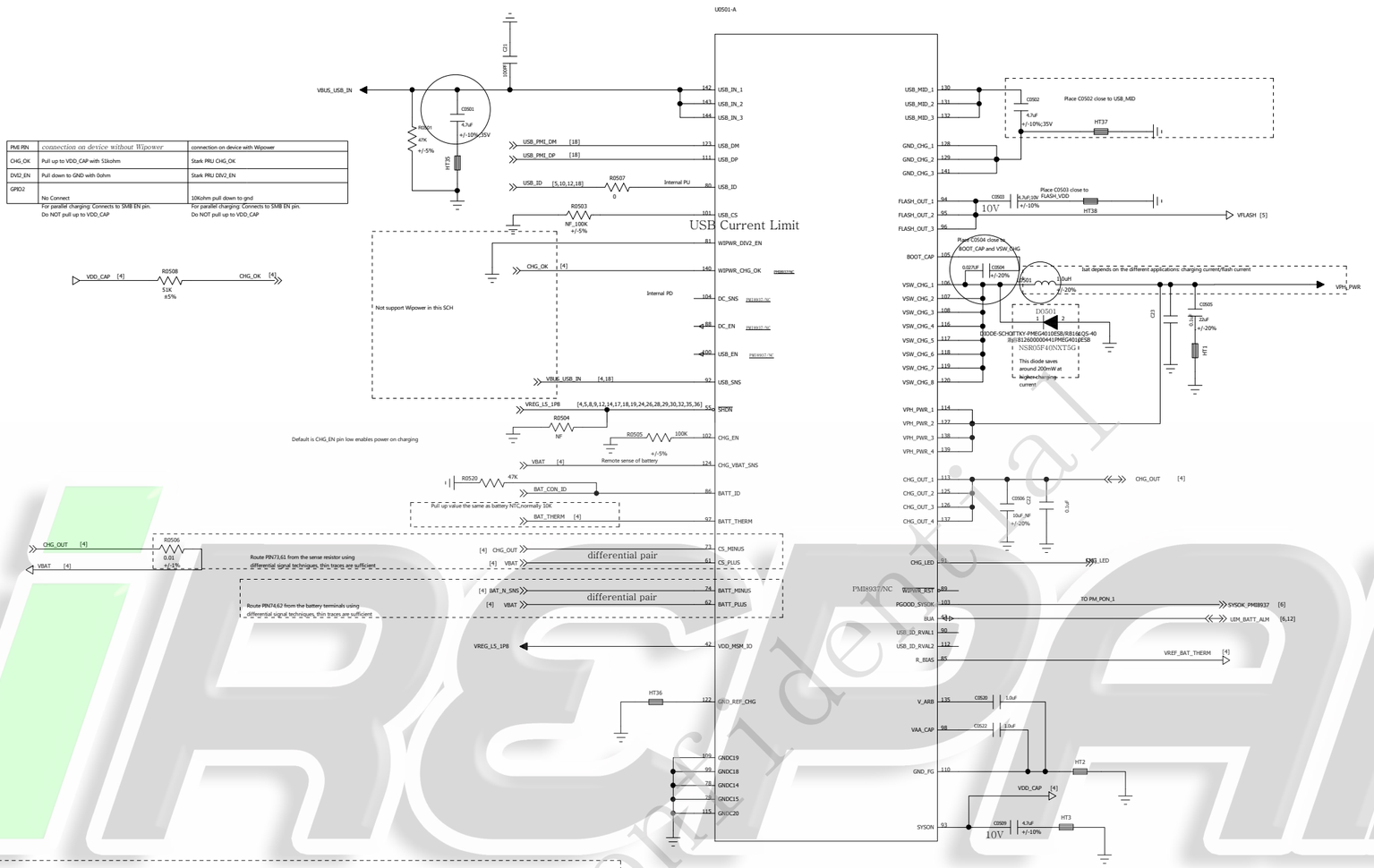

PMI_VDD_CAP net is 5VDC,cap is 0603.
Do not use 0402 as may derate to -80%.

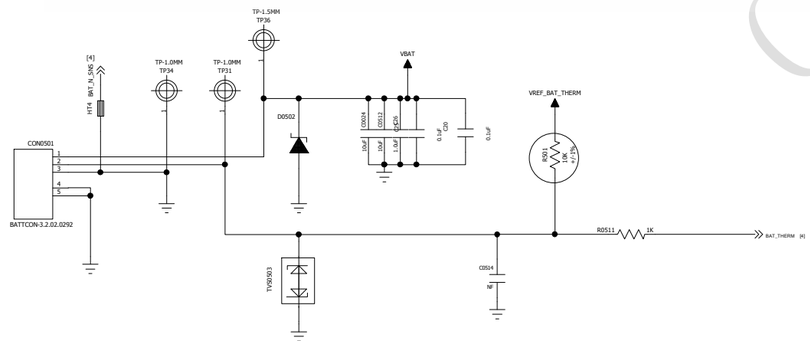

BATID Resistor Pull down to GND in BAT Module.
BAT_THERM NTC(68K B=4250) Pull down to GND in BAT Module.

BATTERY CONNECTOR

PMI8940 CHARGER

Title
Size | Name | Rev
Date: | Sheet | of

iREPAIR Consider Material

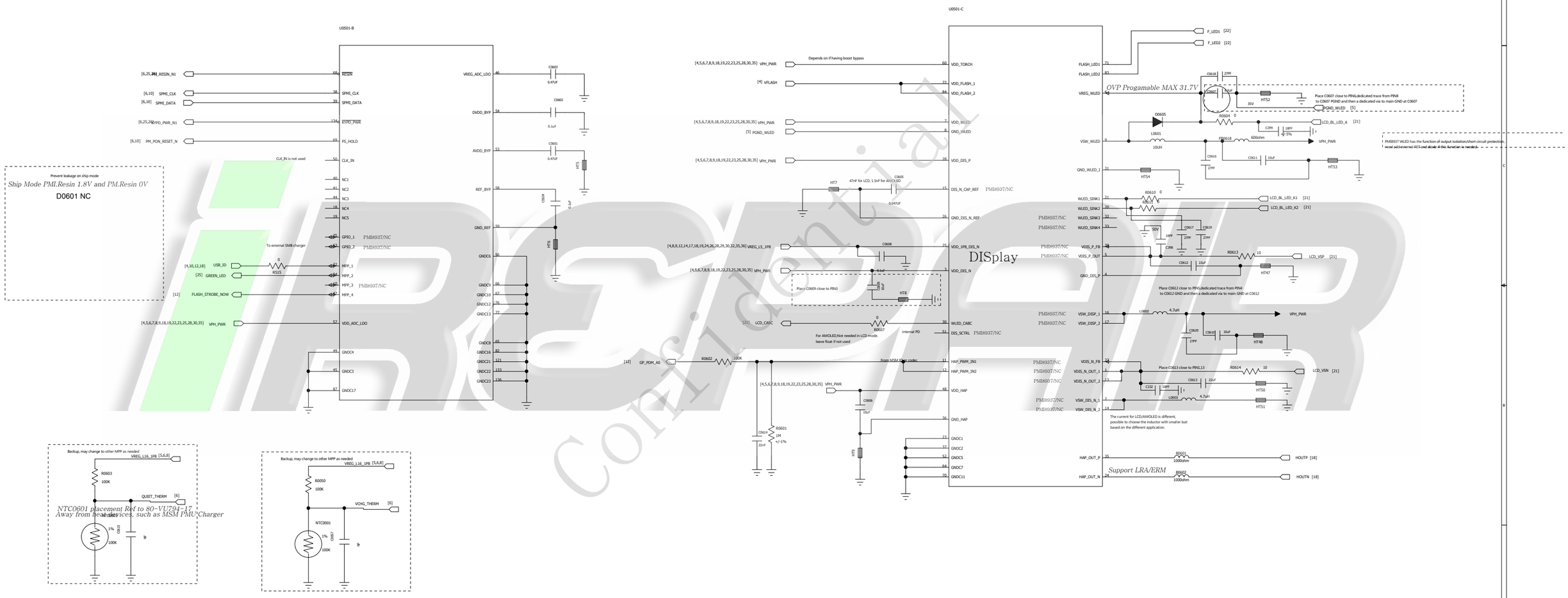
U0501-B
U0501-C
Prevent leakage on ship mode
Ship Mode PMI.Resin 1.8V and PM.Resin 0V
D0601 NC
CLK_IN is not used
To external SMB charger
Backup, may change to other MPP as needed
NTC0601 placement Ref to 80-VU704-17
Away from heat devices, such as MSM PMU Charger
Backup, may change to other MPP as needed
NTC0001
OVP Progamable MAX 31.7V
DISplay
Support LRA/ERM
PMI8940 Control/Interface
QUALCOMM Technologies,Inc.
5775 Morehouse Drive
San Diego, CA 92121-1714
U.S.A.
Title
Size
Name
Rev
Date:
Sheet
of

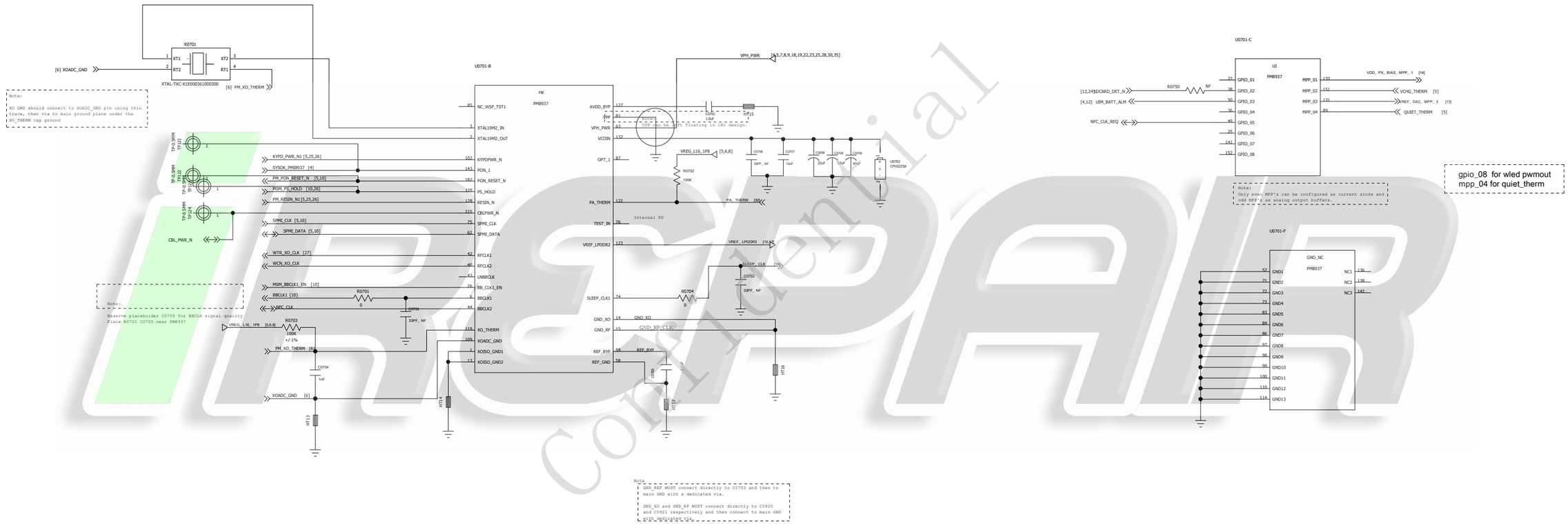

Confidential

PM8937 Control and MPP/Clock

QUALCOMM Technologies, Inc.
5775 Morehouse Drive
San Diego, CA 92121-1714
U.S.A.

Title

Size | Name | Rev

Date: | Sheet of

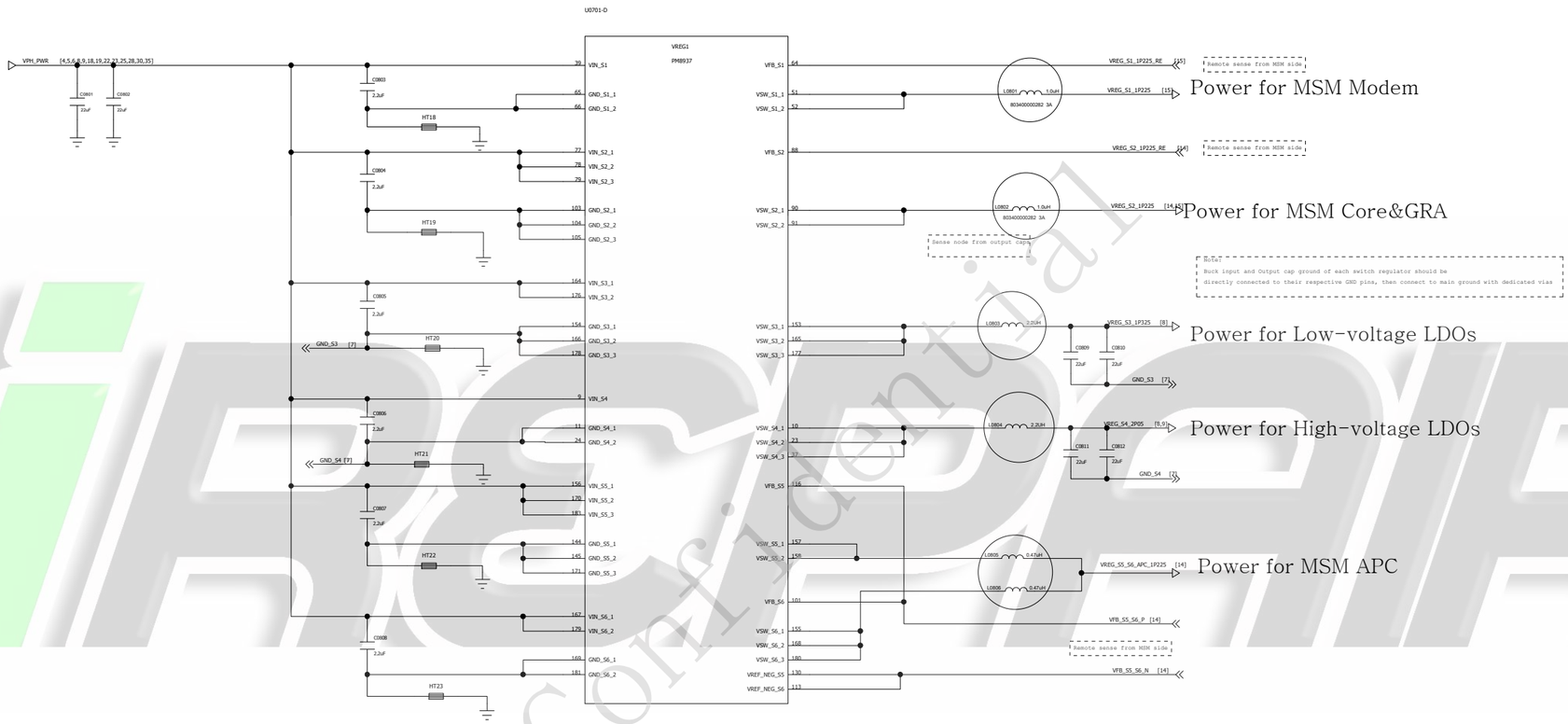

PM8937 Buck converter

QUALCOMM Technologies, Inc.
5775 Morehouse Drive
San Diego, CA 92121-1714
U.S.A.

Title

Size	Name	Rev

Sheet

Date: | Sheet of

iRepair
Confidential

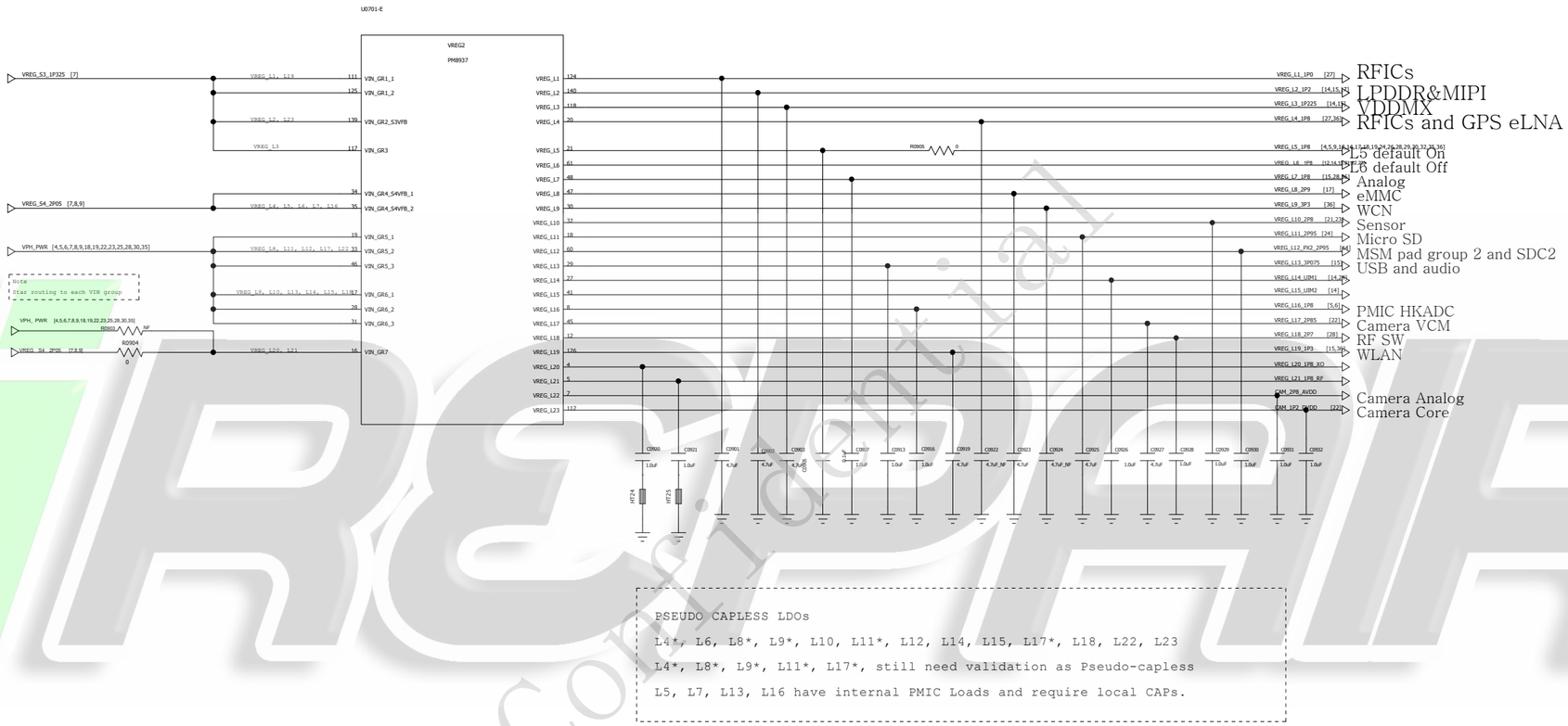

PSEUDO CAPLESS LDOs

L4*, L6, L8*, L9*, L10, L11*, L12, L14, L15, L17*, L18, L22, L23

L4*, L8*, L9*, L11*, L17*, still need validation as Pseudo-capless

L5, L7, L13, L16 have internal PMIC Loads and require local CAPs.

iREPAIR
Confidential

PM8937 LDO circuits

QUALCOMM Technologies, Inc.
5775 Morehouse Drive
San Diego, CA 92121-1714
U.S.A.

Title

Size | Name | Rev

Date: | Sheet of

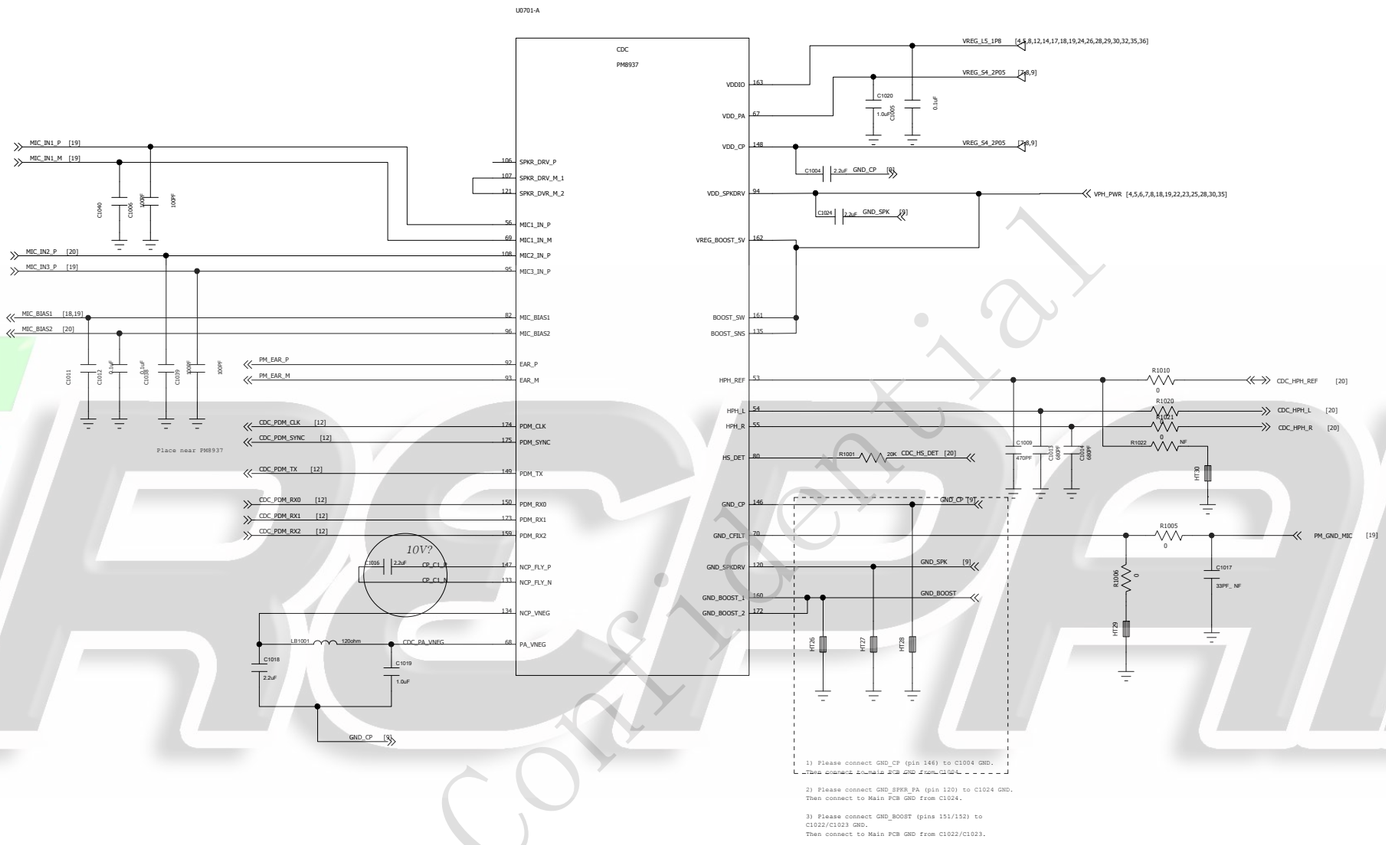

iREPAIR
Confidential

PM8937 Codec

QUALCOMM Technologies, Inc.
5775 Morehouse Drive
San Diego, CA 92121-1714
U.S.A.

Title

Size	Name	Rev

Date: Sheet of

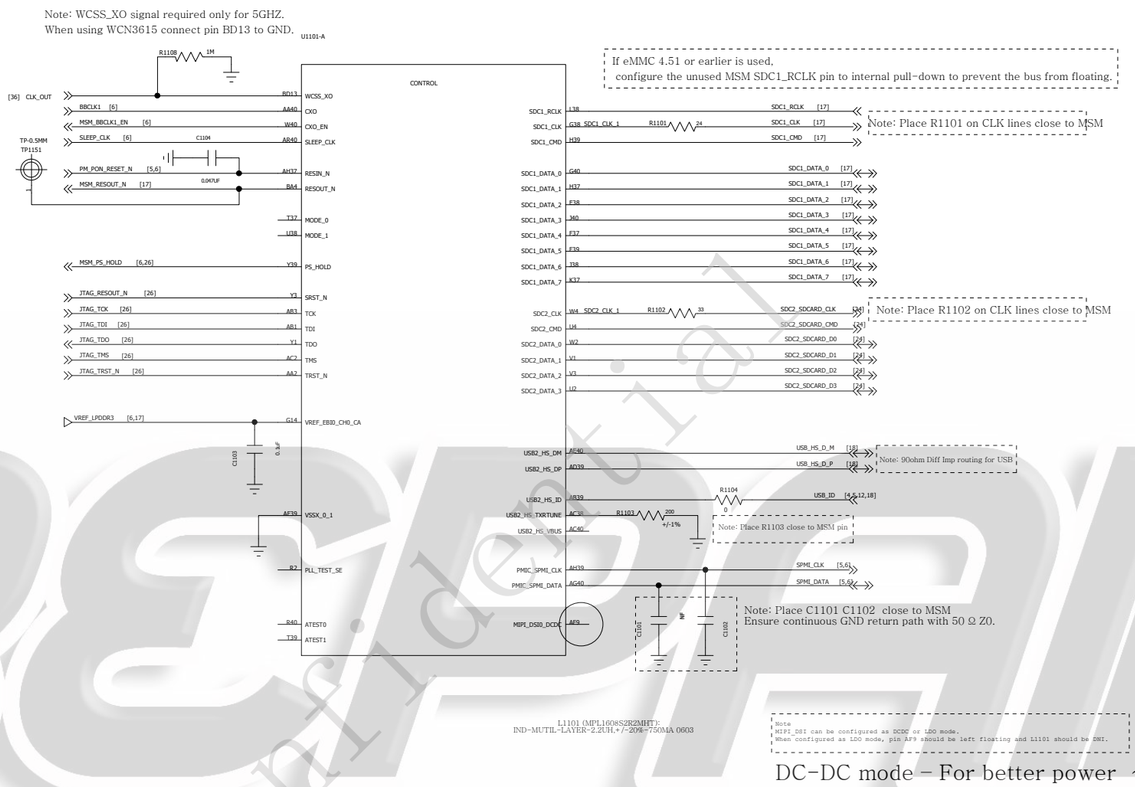

IRESPIR
Confidential

MSM8917 Control

QUALCOMM Technologies, Inc.
5775 Morehouse Drive
San Diego, CA 92121-1714
U.S.A.

Title

Size | Name | Rev

Date: | Sheet of

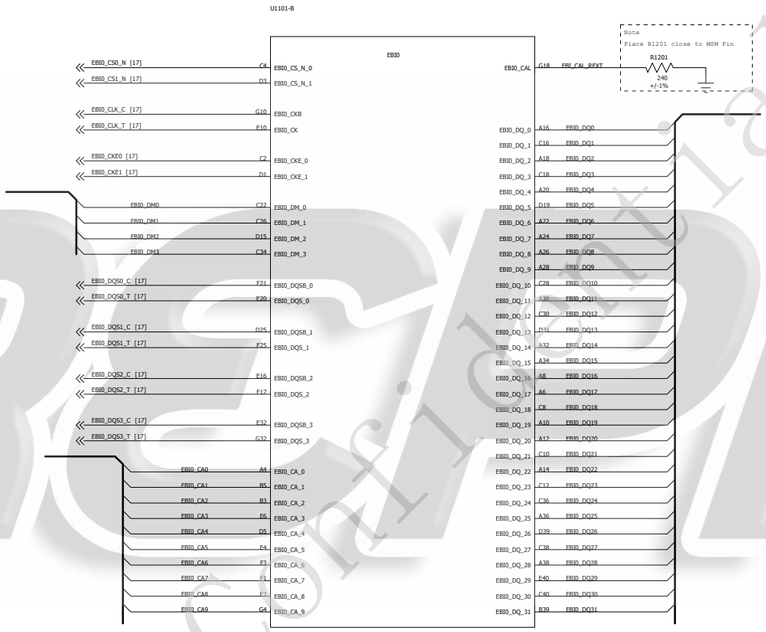

IRSHAIR
Confidential

MSM8917 EBI

QUALCOMM Technologies, Inc.
5775 Morehouse Drive
San Diego, CA 92121-1714
U.S.A.

Title

Size	Sheet Name	Rev

Date: Sheet of

Note: Asterisks (*) indicate modem power management (MPM) wake-up pins

R1315	R1316	R1317	R1327	GPIO12&13		
10k	NC	10k	NC	H&L		S88739AA1
NC	10k	10k	NC	L&L		S88739BA1
10k	NC	NC	10k	H&H		S88740AA1
NC	10k	NC	10k	L&H		S88740BA1

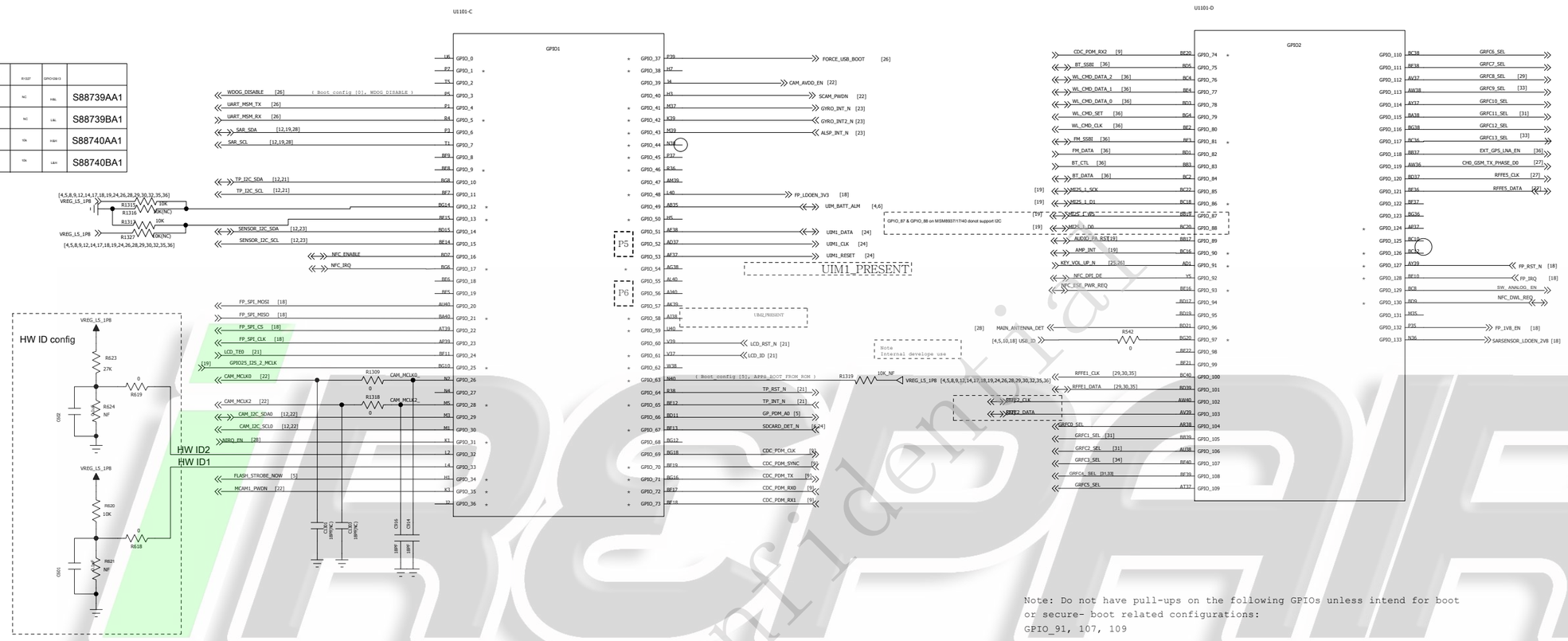

Note: Do not have pull-ups on the following GPIOs unless intend for boot or secure- boot related configurations:
GPIO_91, 107, 109

GPIO	BOOT_CONFIG
GPIO_3	BOOT_CONFIG[0]/WDOG_DISABLE
GPIO_111	BOOT_CONFIG[1]
GPIO_112	BOOT_CONFIG[2]
GPIO_88	BOOT_CONFIG[3]

BOOT_CONFIG[3:1]	BOOT_CONFIG
0b000	SDC1 -> SDC2 -> USB2.0
0b010	SDC1
0b100	SDC2-> SDC1

Default Boot Config (0b000) is SDC1(eMMC)

I2C PULL-UP RESISTORS

Note: Ensure SW sets these GPIOs (Sensor, CTP and Camera I2C bus) to inout pull down when the peripherals are powered off to eliminate leakage.

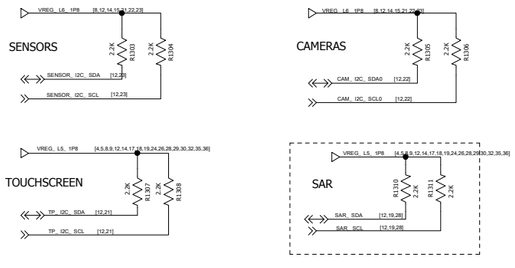

MSM8917 GPIO

QUALCOMM Technologies, Inc.
5775 Morehouse Drive
San Diego, CA 92121-1714
U.S.A.

Title

Size | Name | Rev

Date: | Sheet of

Confidential

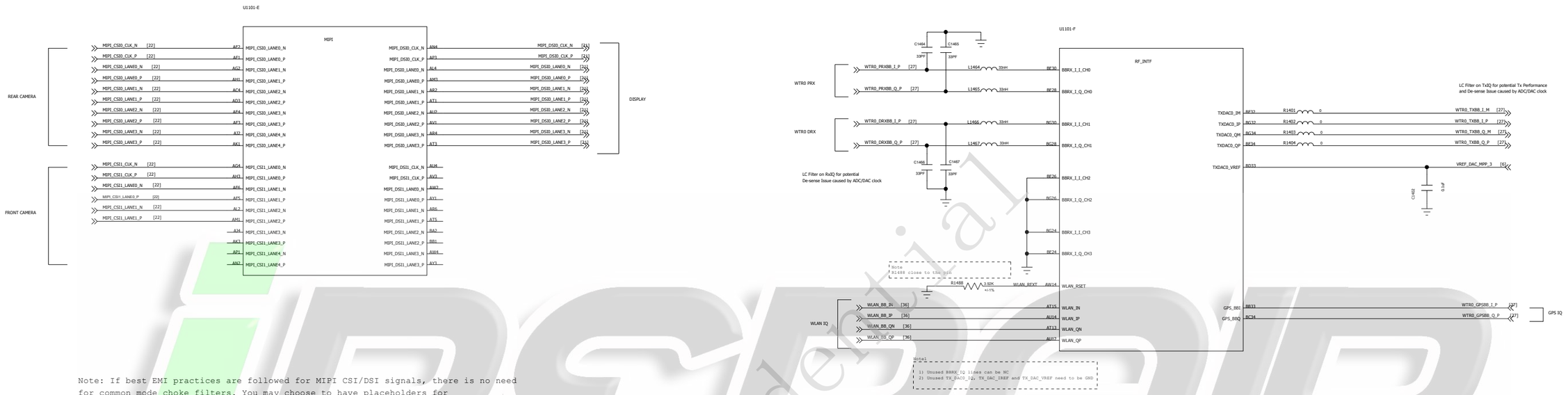

Note: If best EMI practices are followed for MIPI CSI/DSI signals, there is no need for common mode choke filters. You may choose to have placeholders for common mode depending upon your design constraints.
Extreme care must be taken that no stubs are created by doing so.

iREPAIR
Confidential

MSM8917 MIPI and RF Control

QUALCOMM Technologies, Inc.
5775 Morehouse Drive
San Diego, CA 92121-1714
U.S.A.

Title

Size | Name | Rev

Date: | Sheet of

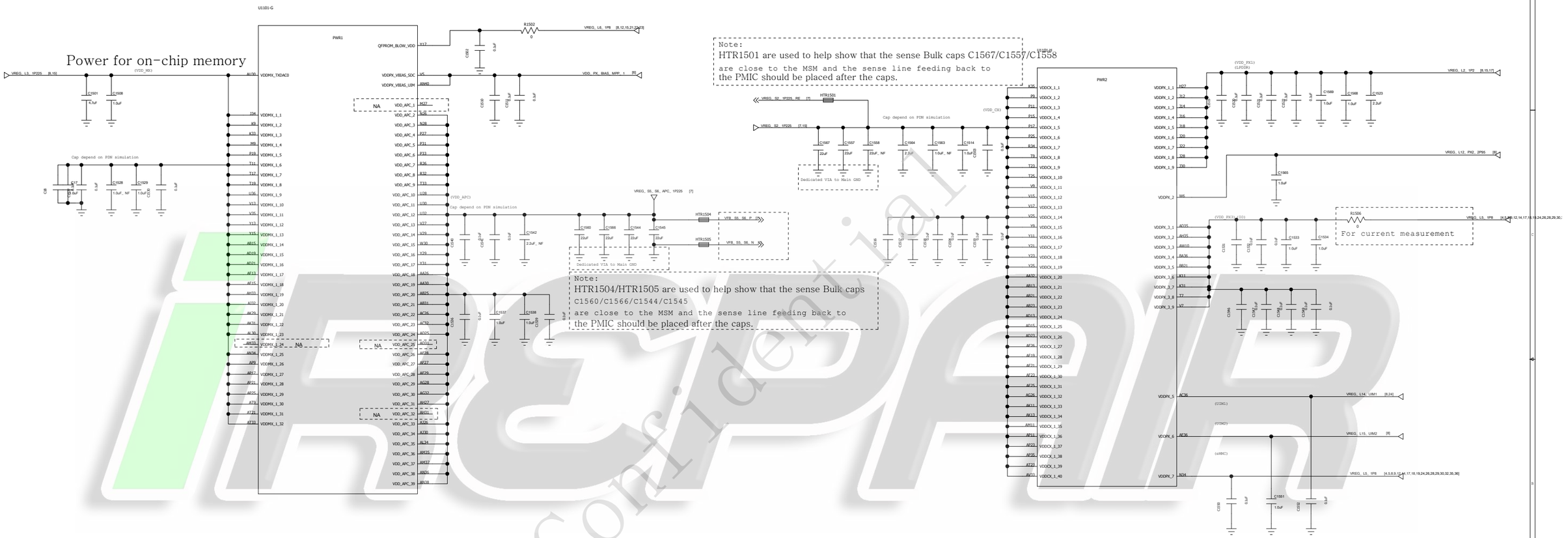

MSM8917 POWER1

Confidential

QUALCOMM Technologies, Inc.
5775 Morehouse Drive
San Diego, CA 92121-1714
U.S.A.

Title

Size	Sheet Name	Rev

Date: Sheet of

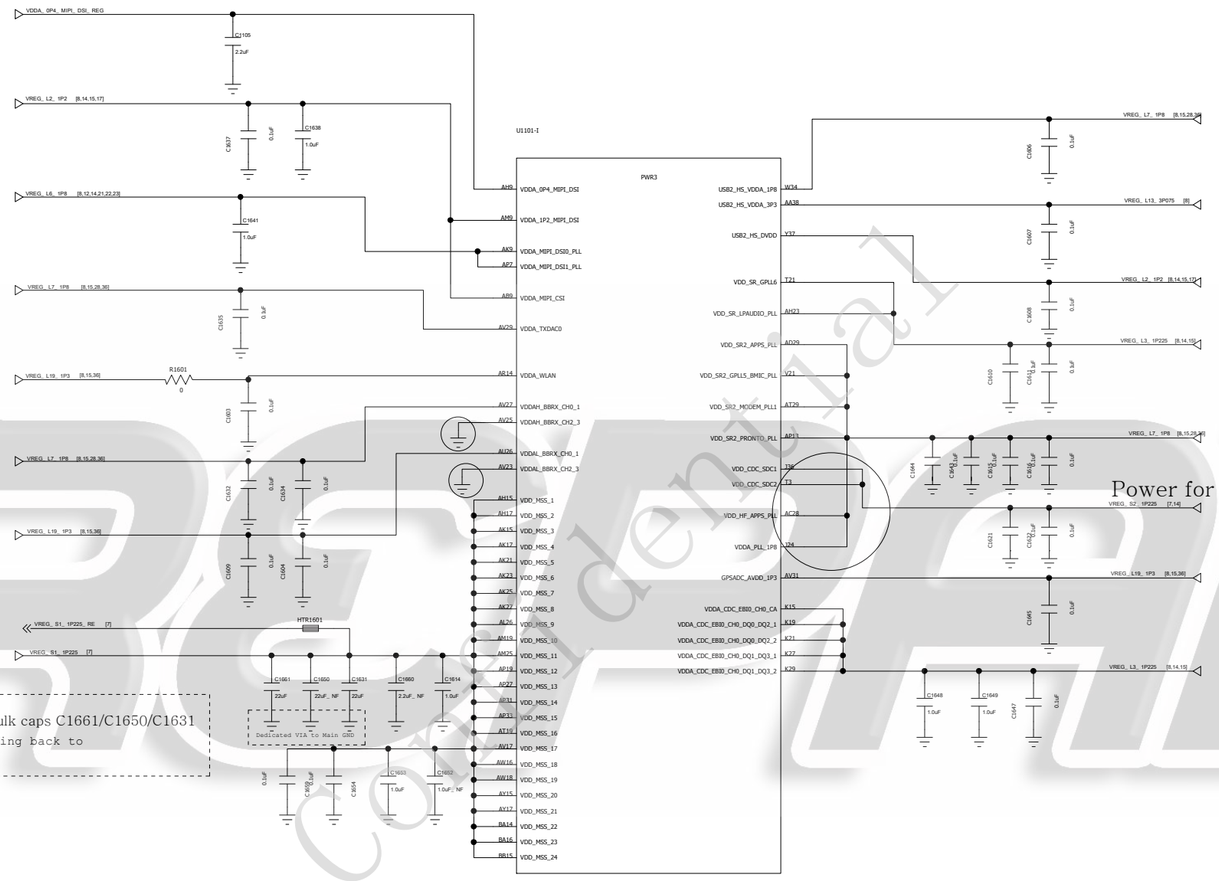

Note:
HTR1601 are used to help show that the sense Bulk caps C1661/C1650/C1631 are close to the MSM and the sense line feeding back to the PMIC should be placed after the caps.

Power for secure digital calibration delay circuits

Confidential

MSM8917 POWER2

QUALCOMM Technologies, Inc.
5775 Morehouse Drive
San Diego, CA 92121-1714
U.S.A.

Title

Size	Name	Rev

Sheet

Date: Sheet of

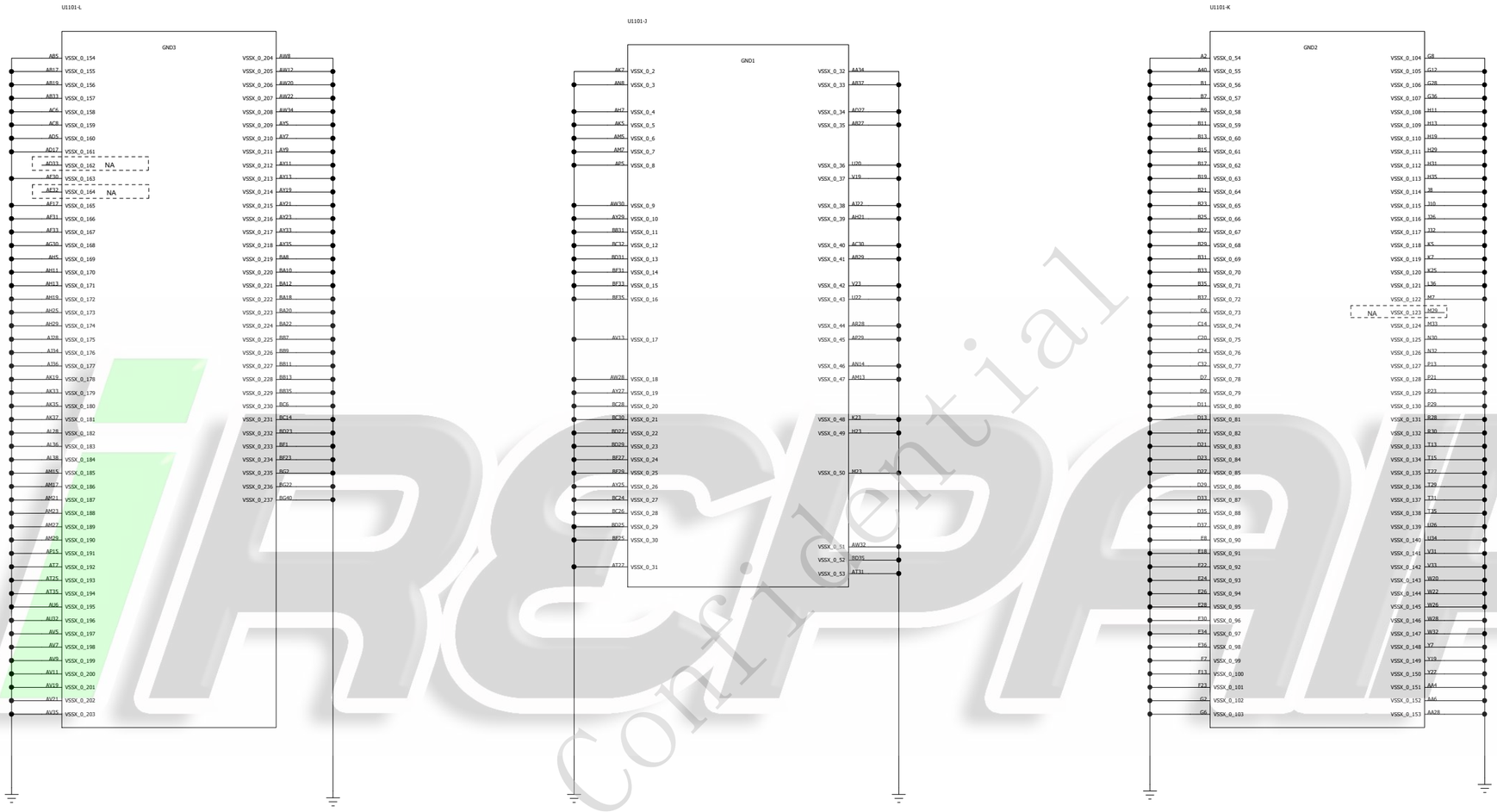

MSM8917 GND

Confidential
REPAIR

QUALCOMM Technologies, Inc.
5775 Morehouse Drive
San Diego, CA 92121-1714
U.S.A.

Title

Size | Name | Rev

Date: | Sheet of

	MICRO/HYNIX	SAMSUNG
U1501.G3	ZQ1	NC
U1501.A7	RFU	RCLK

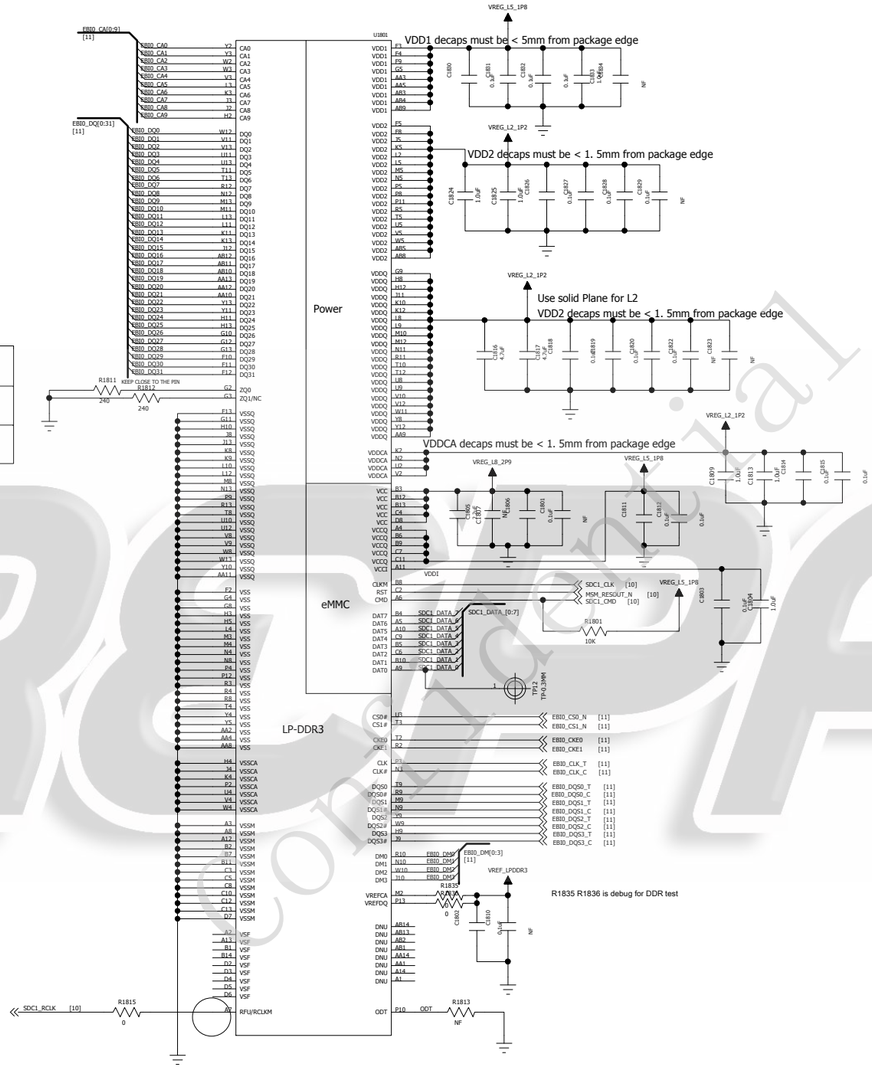

MEMORY:LPDDR3+ EMMC

QUALCOMM Technologies, Inc.
5775 Morehouse Drive
San Diego, CA 92121-1714
U.S.A.

Title

Size	Sheet Name	Rev

Date: Sheet of

iRepair Confidential

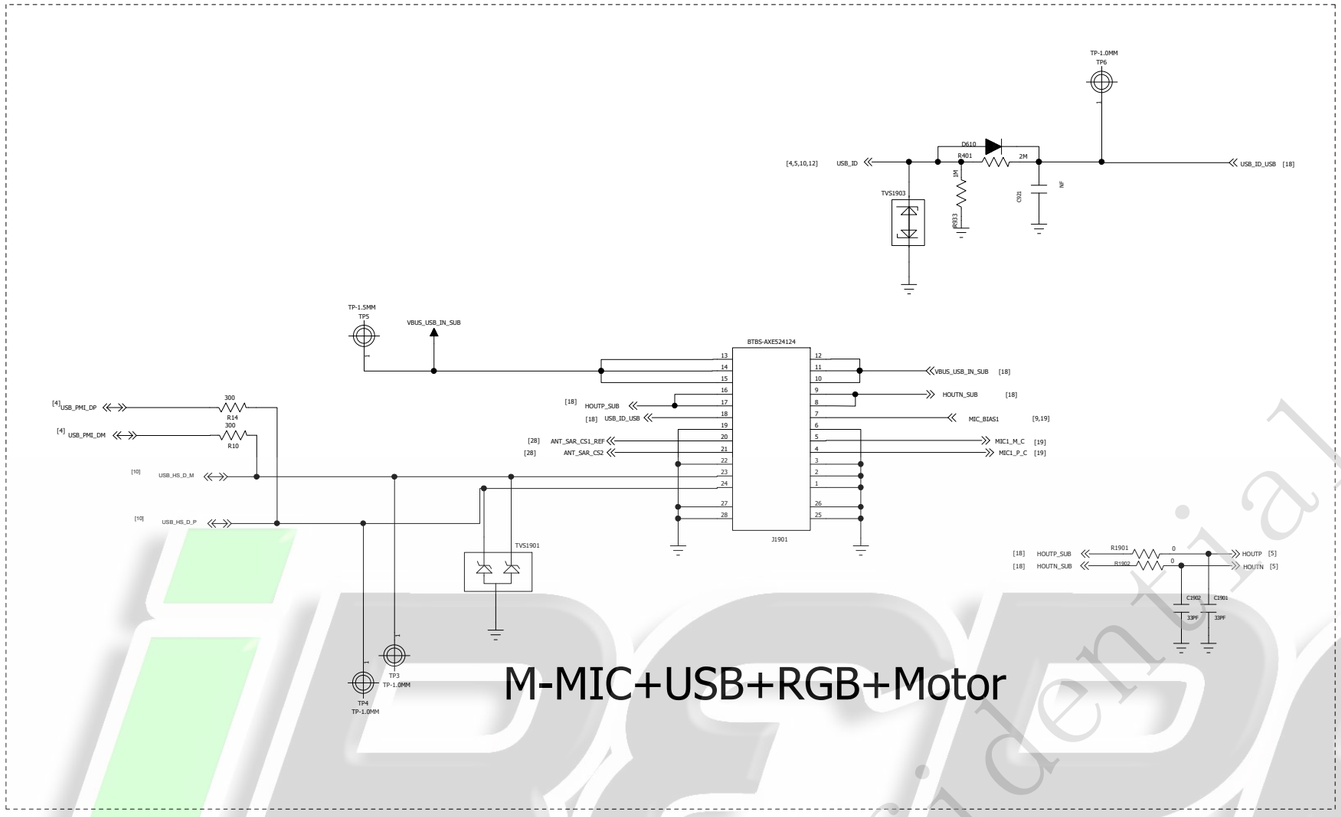

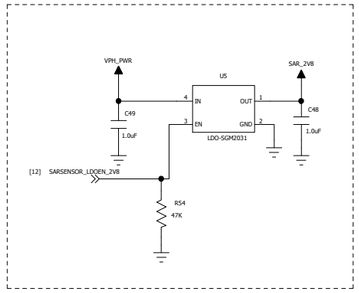

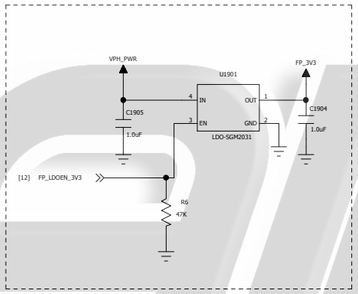

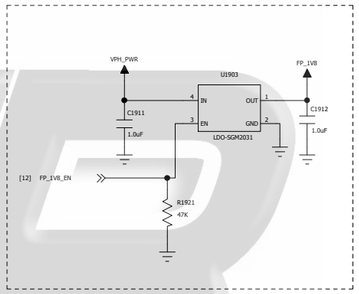

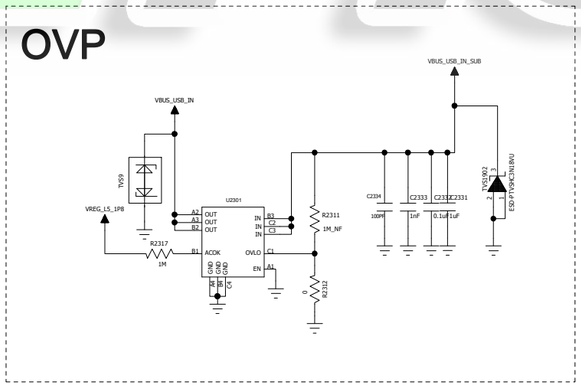
OVP
VBUS_USB_IN_SUB
VBUS_USB_IN
TVS9
VREG_L5_1P8
U2301
A2 OUT
A3 OUT
B2 OUT
B1 ACOK
GND GND GND GND
IN B3
IN C2
IN C3
OVLO C1
EN A1
R2317 1M
R2311 1M_NF
R2312 10
C2334 100PF
C2333 1nF
C2332 0.1uF
C2331 1uF
VCC
VCC
VCC

SMART PA

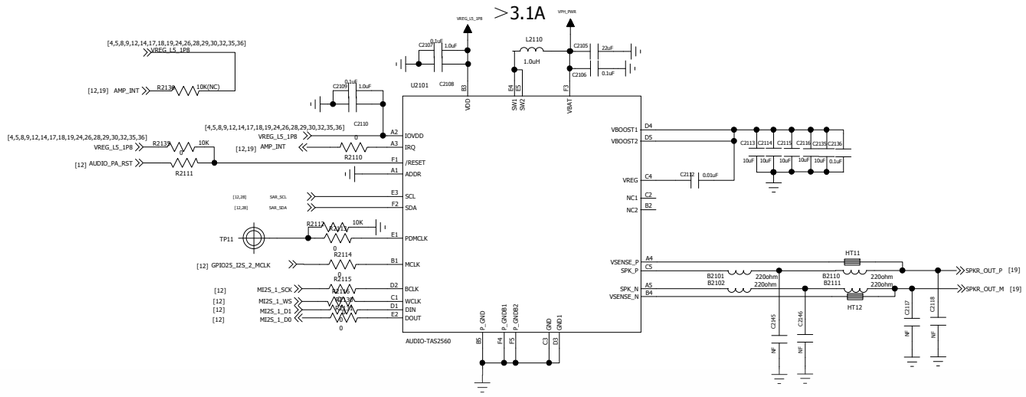

PRIMARY MIC

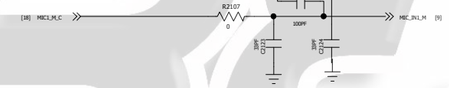

RECEIVER&speaker

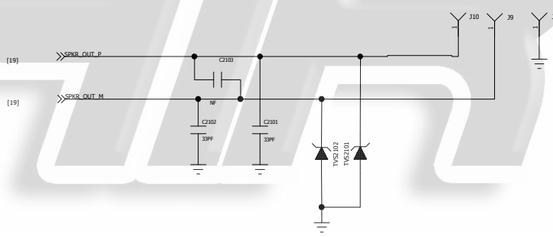

AUXMIC

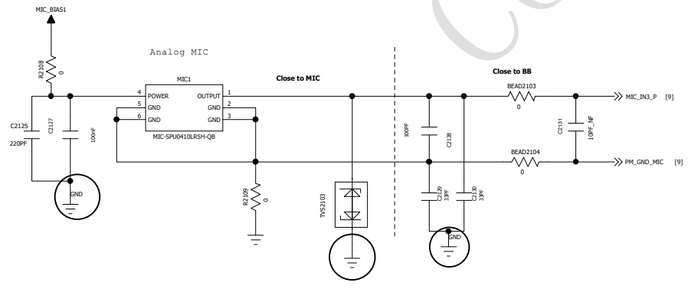

together then single via to main GND

SECONDARY MIC/RECEIVER

iREPAIR
Confidential

QUALCOMM Technologies,Inc.
5775 Morehouse Drive
San Diego, CA 92121-1714
U.S.A.

Title

Size | Name | Sheet | Rev

Date: | Sheet of

AUDIO JACK

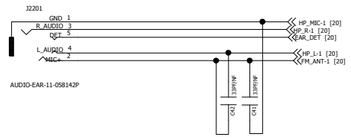

American Standard
HEADSET PLUG IN:HP_JACKDET "0"
HEADSET PLUG OUT:HP_JACKDET "1"

Note: Ferrite beads and their corresponding bypass capacitors on CDC_HPH_L, CDC_HPH_R and CDC_HPH_REF are needed to reduce noise generated by audio/FM concurrency

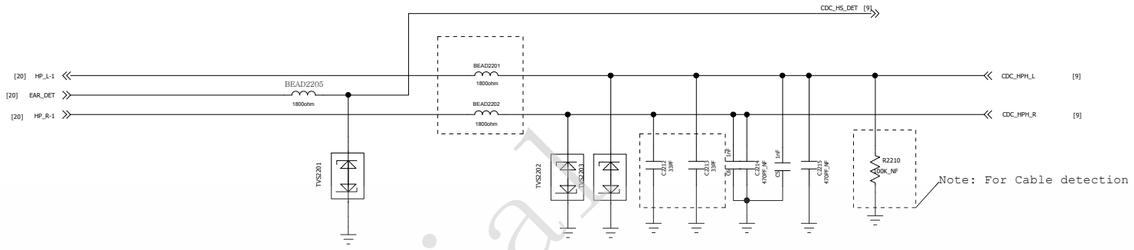

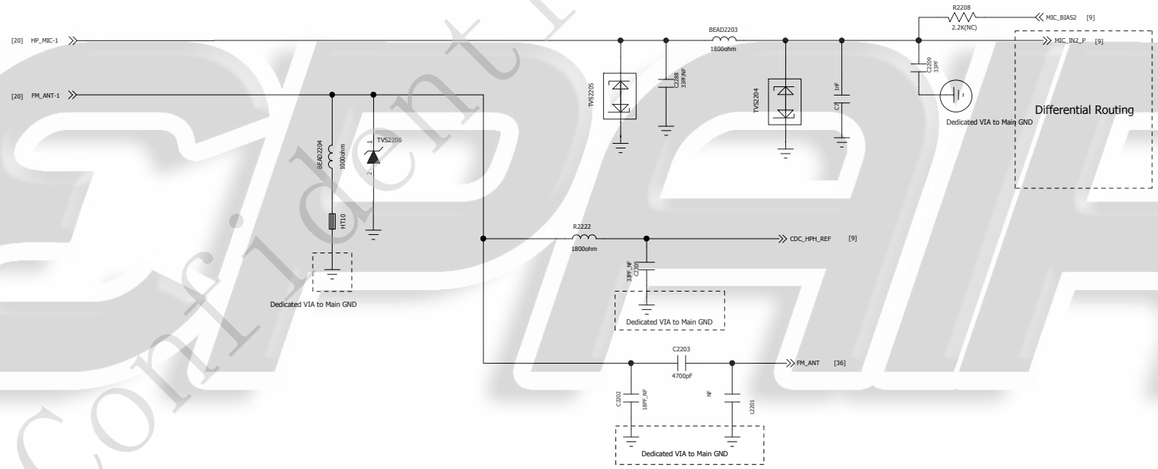

iREPAIR
Confidential

EARPHONE

QUALCOMM Technologies, Inc.
5775 Morehouse Drive
San Diego, CA 92121-1714
U.S.A.

Title

Size | Sheet Name | Rev

Date: | Sheet of

CTP

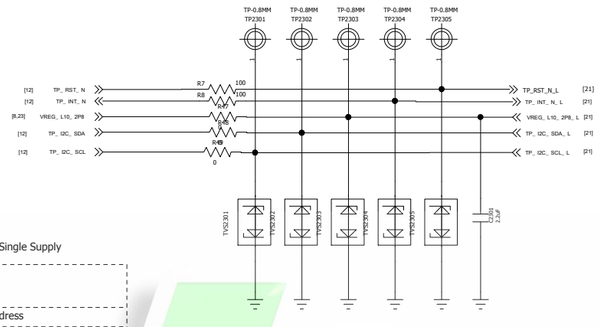

Power on sequence: Single Supply

FocalTech: FT5336

	I2C Address	
Write	0x70	It can be changed by FACTORY.
Read	0x71	

LCD

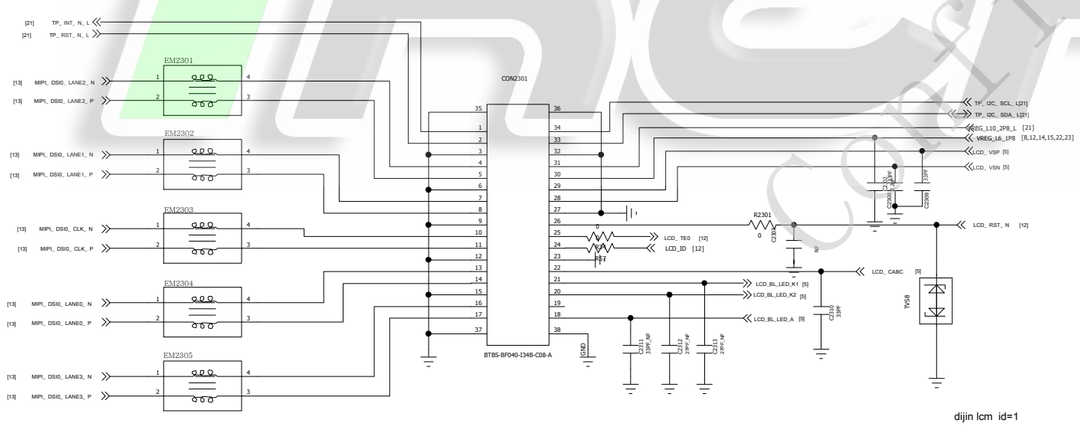

dijin lcm id=1

Note: If best EMI practices are followed for MIPI CSI/DSI signals, there is no need
for common mode choke filters. You may choose to have placeholders for
common mode depending upon your design constraints.
Extreme care must be taken that no stubs are created by doing so.

LCD interface and backlight

QUALCOMM Technologies, Inc.
5775 Morehouse Drive
San Diego, CA 92121-1714
U.S.A.

Title

Size | Sheet Name | Rev

Date: | Sheet of

iREPAIR
Confidential

FRONT_camera

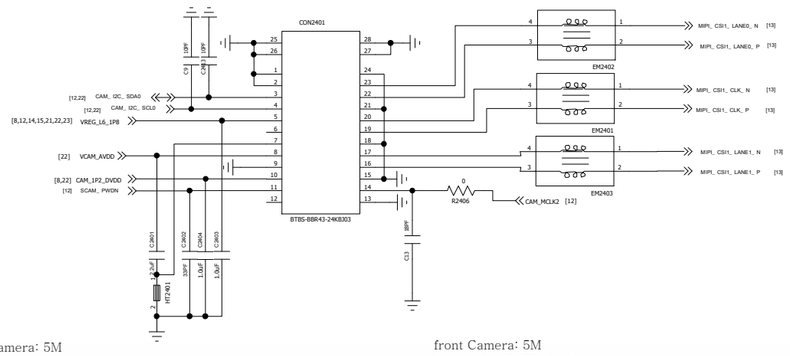

front Camera: 5M
Sensor: OV05675-GA4A
AVDD:2.8V
DOVDD:1.8V
DVDD:1.2V

I2C Address	
Write	0x6C
Read	0x6D

front Camera: 5M
Sensor: OV05675-GA4A
AVDD:2.8V
DOVDD:1.8V
DVDD:1.2V

I2C Address	
Write	0x6C
Read	0x6D

FLASH LED(front)

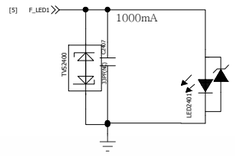

Main Camera

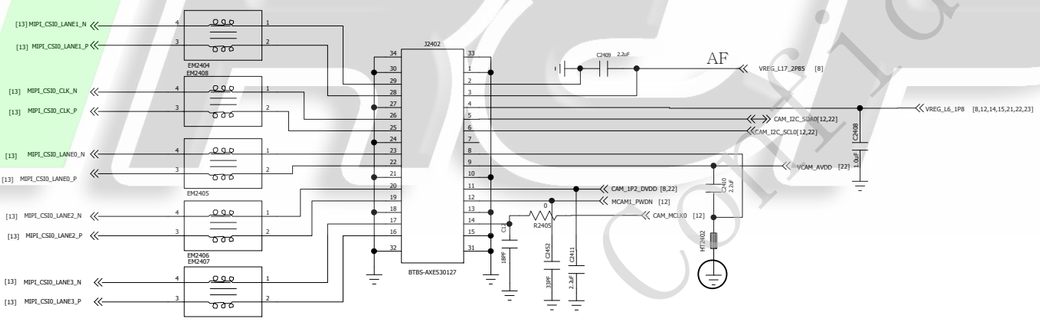

Rear Camera: 8M
Sensor: OV08856-GA4A
AVDD:2.8V
DOVDD:1.8V
DVDD:1.2V
AFVDD:2.8V
Driver ID :0X18

I2C Address	
Write	0x20
Read	0x21

Rear Camera: 8M
Sensor: OV08856-GA4A
AVDD:2.8V
DOVDD:1.8V
DVDD:1.2V
AFVDD:2.8V
Driver ID :0X18

I2C Address	
Write	0x20
Read	0x21

Rear Camera: 13M
Sensor: OV13855-GA5A
AVDD:2.8V
DOVDD:1.8V
DVDD:1.2V
AFVDD:2.8V
Driver ID :0X18

I2C Address	
Write	0x6C
Read	0x6D

Rear Camera: 13M
Sensor: S5K3L8XXM3-FGX9
AVDD:2.8V
DOVDD:1.8V
DVDD:1.2V
AFVDD:2.8V
Driver ID :0X18

I2C Address	
Write	0x5A
Read	0x5B

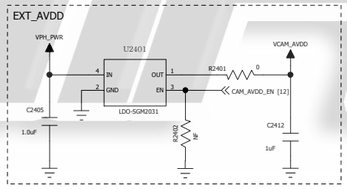

FLASH LED(back)

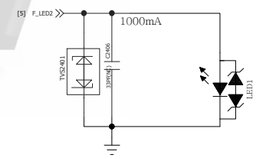

Main/Slave Camera and Flash

iRepair
Confidential

QUALCOMM Technologies, Inc.
5775 Morehouse Drive
San Diego, CA 92121-1714
U.S.A.

Title
Size | Name | Rev
Date: | Sheet of

G-Sensor

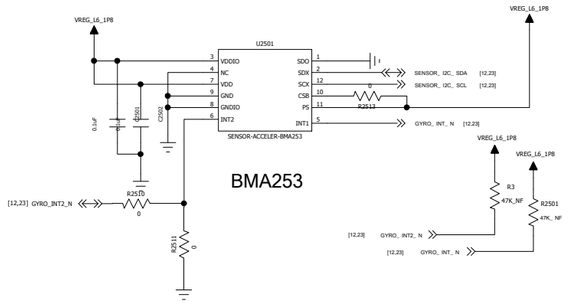

	BM253	KXJT3_1058
R2510	0R	NC
R2511	NC	0R

ALS+PS+IR

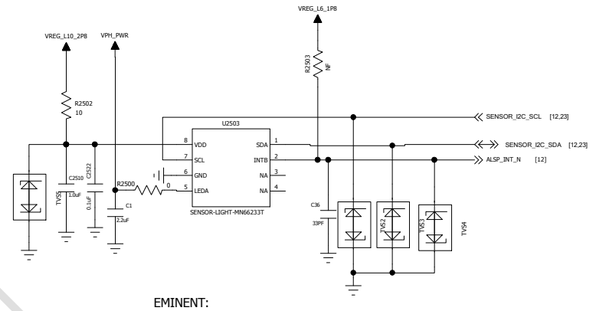

EMINENT:

I2C Address	
Write	
Read	

desense apk enable sensor when we enable the audio

M-Sensor

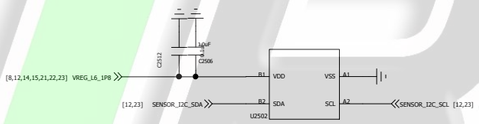

AK09918C

I2C Address	
Write	0x18
Read	0x19

Confidential

SENSORS

QUALCOMM Technologies, Inc.
5775 Morehouse Drive
San Diego, CA 92121-1714
U.S.A.

Title

Size | Sheet Name | Rev

Date: | Sheet of

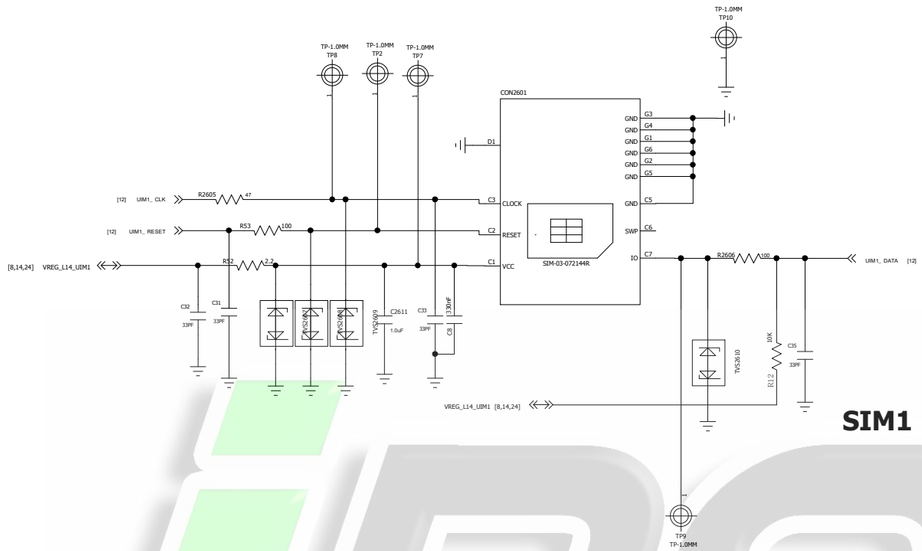

SIM1

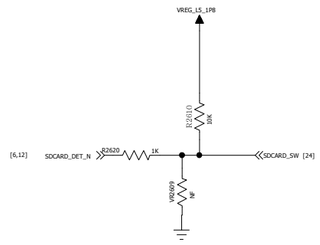

This int should give to GPIO54/GPIO58/GPIO67

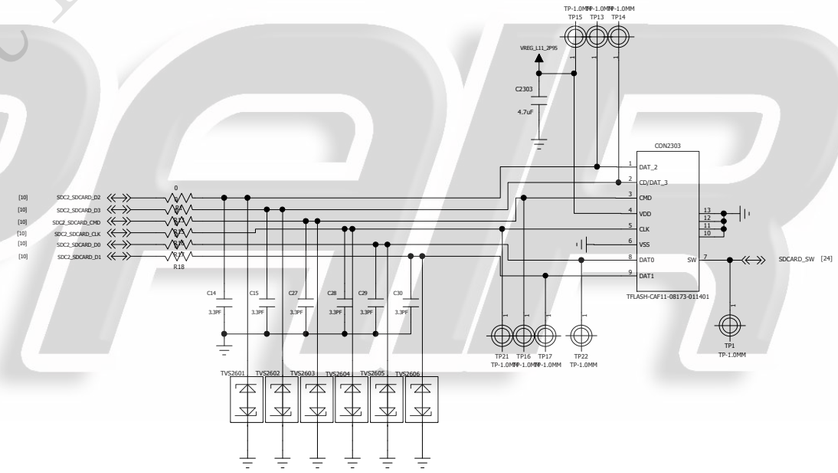

TF

iREPAIR
Confidential

SIM/TF card

QUALCOMM Technologies, Inc.
5775 Morehouse Drive
San Diego, CA 92121-1714
U.S.A.

Title

Size | Name | Rev

Date: | Sheet of

Signal	Description
KEY_VOL_UP_N	Volume Up
PM_RESIN_N	Volume Down
KYPD_PWR_N	PWER ON

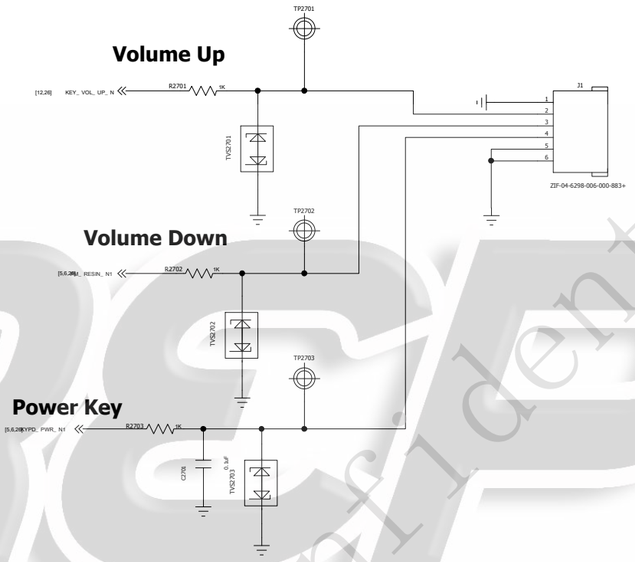

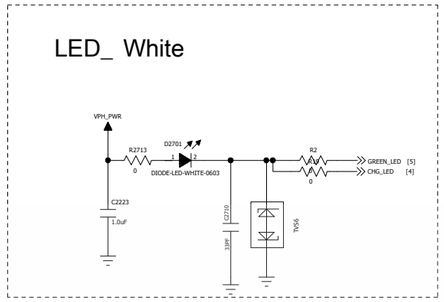

Confidential

Keypad/LED/Status indicator

QUALCOMM Technologies, Inc.
5775 Morehouse Drive
San Diego, CA 92121-1714
U.S.A.

Title

Size | Sheet Name | Rev

Date: | Sheet of

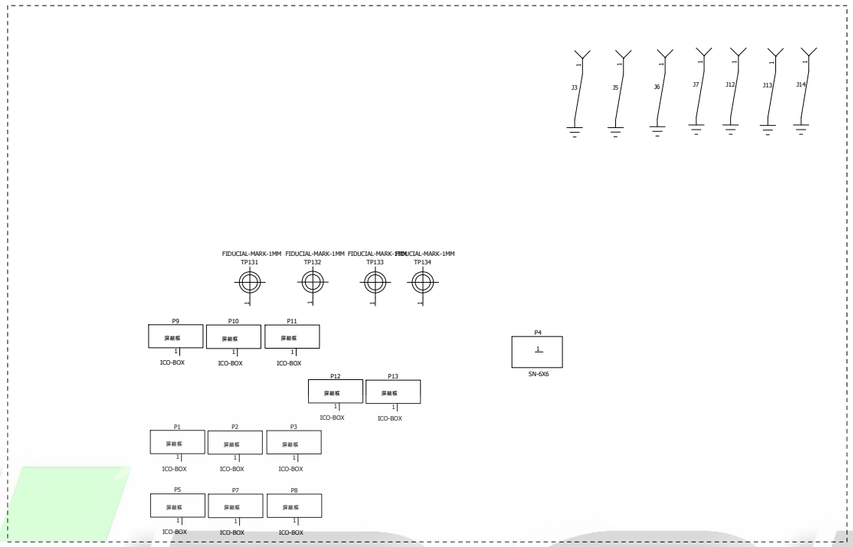

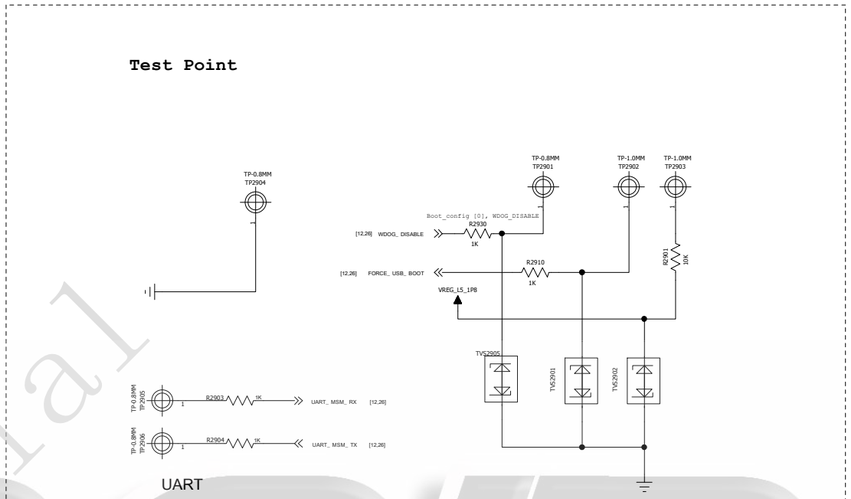

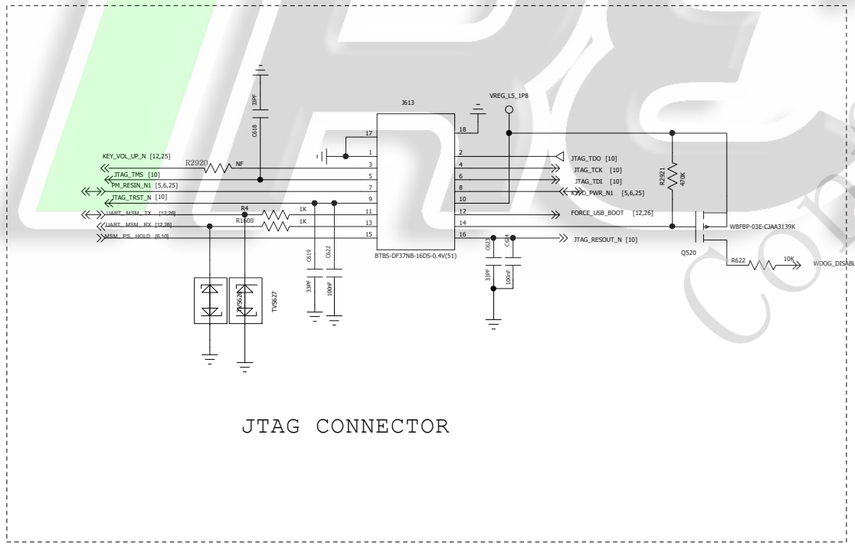

JTAG CONNECTOR

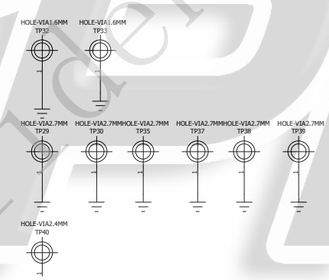

Test Point/Shields

QUALCOMM Technologies, Inc.
5775 Morehouse Drive
San Diego, CA 92121-1714
U.S.A.

Title

Size | Sheet Name | Rev

Date: | Sheet of

iREPAIR
Confidential

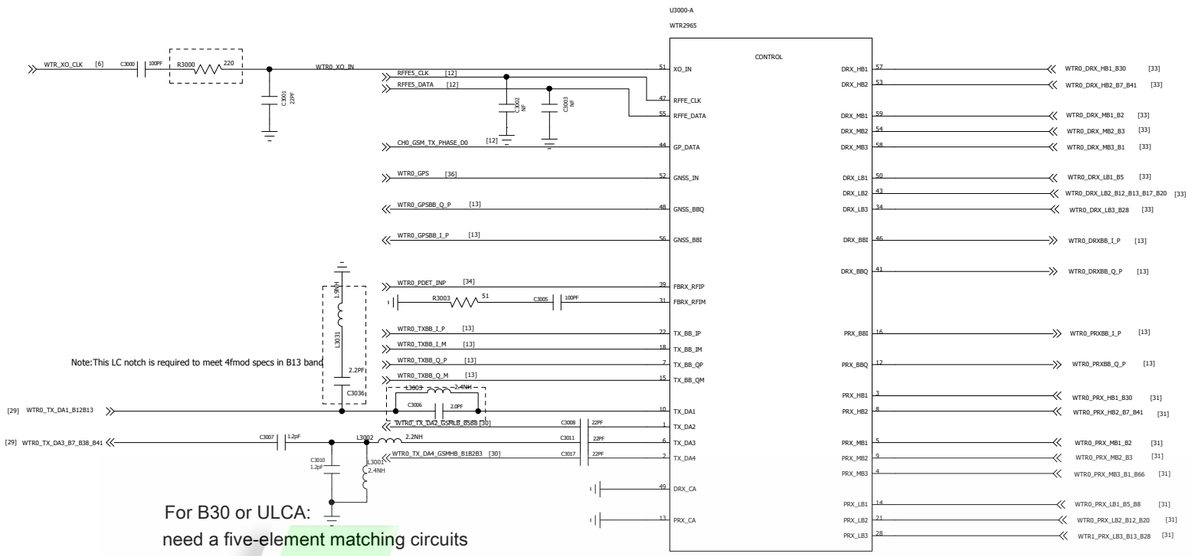

For B30 or ULCA:
need a five-element matching circuits

Note:RX ports have DC at the pin,
so it need DC block,please make sure
there is no DC short to other voltages and GND

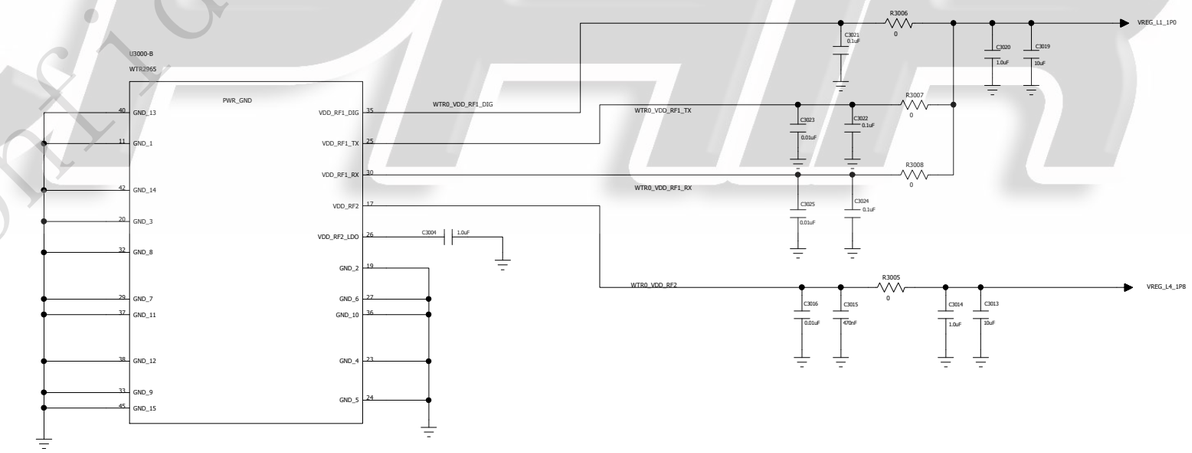

WTR 2955

iREPAIR
Confidential

QUALCOMM Technologies, Inc.
5775 Morehouse Drive
San Diego, CA 92121-1714
U.S.A.

Title

Size | Name | Rev

Date: | Sheet of

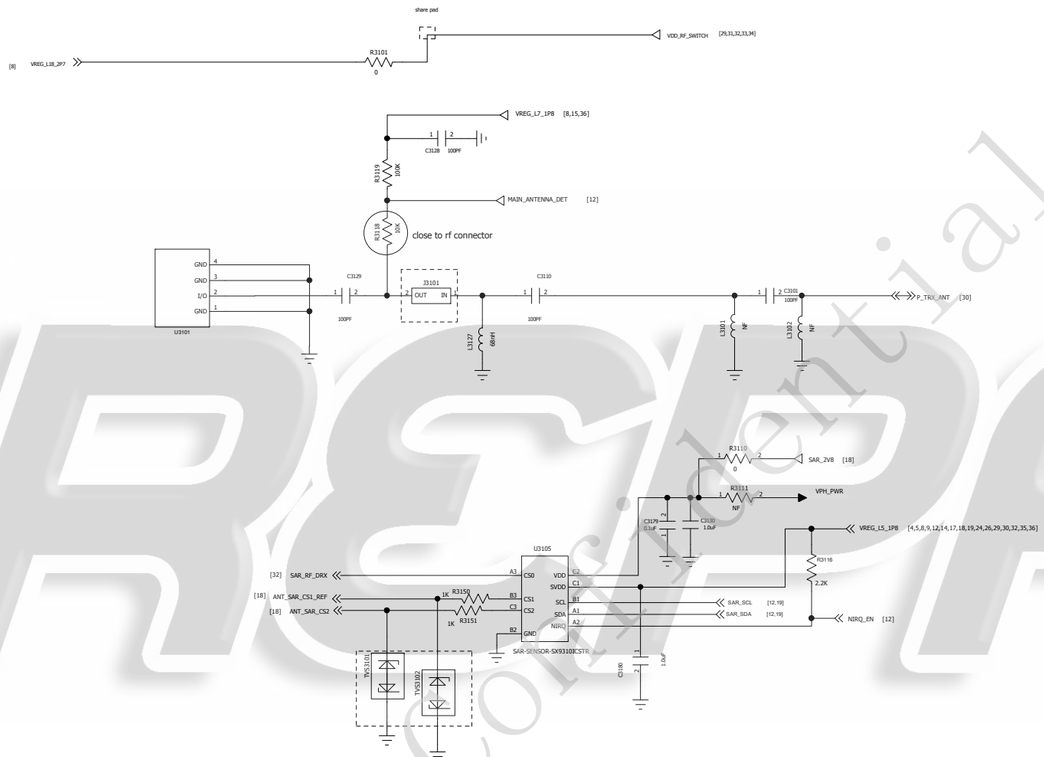

iREPAIR
Confidential

Title

Size | Sheet Name | Rev

Date: | Sheet of

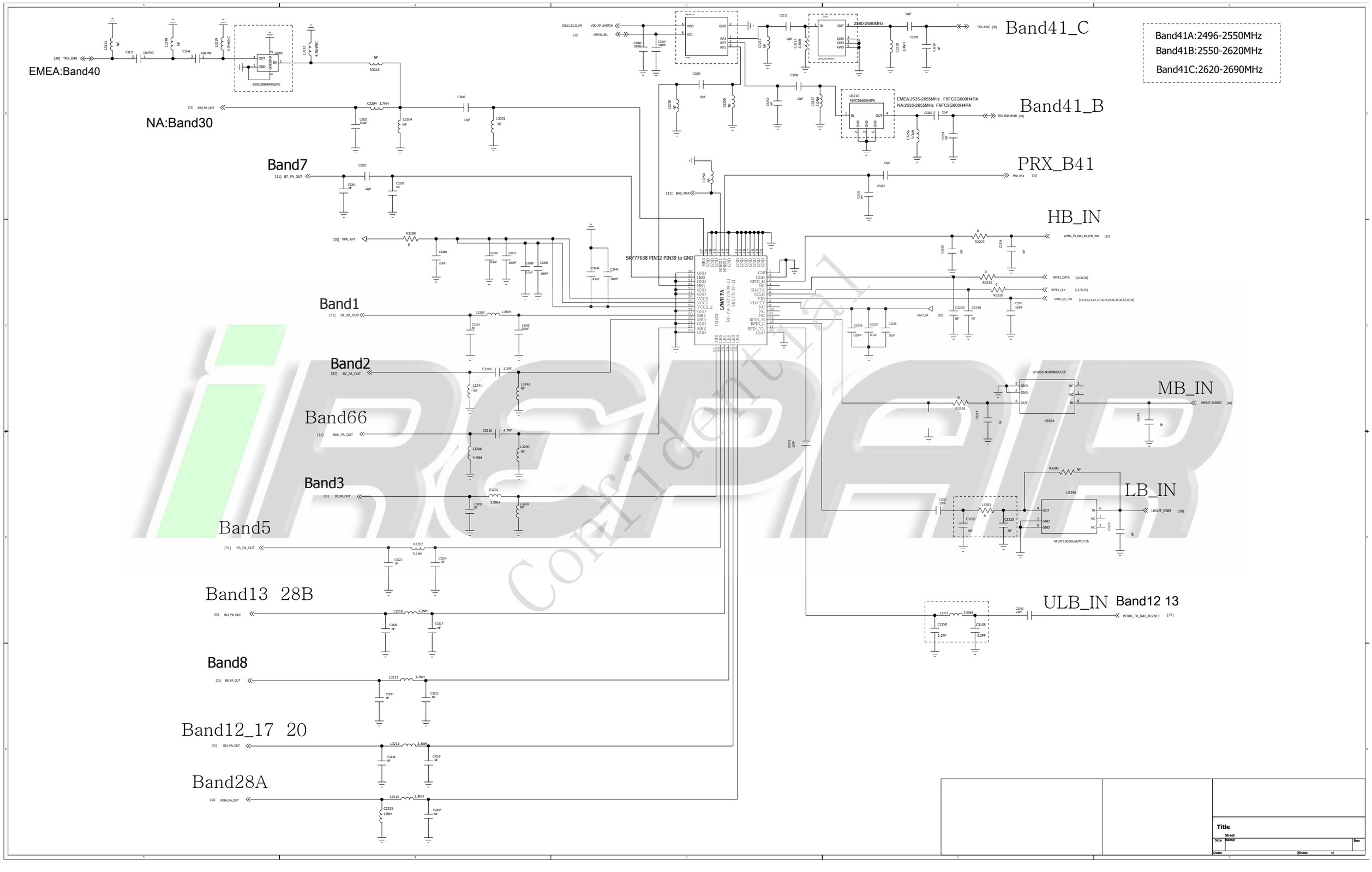

Confidential

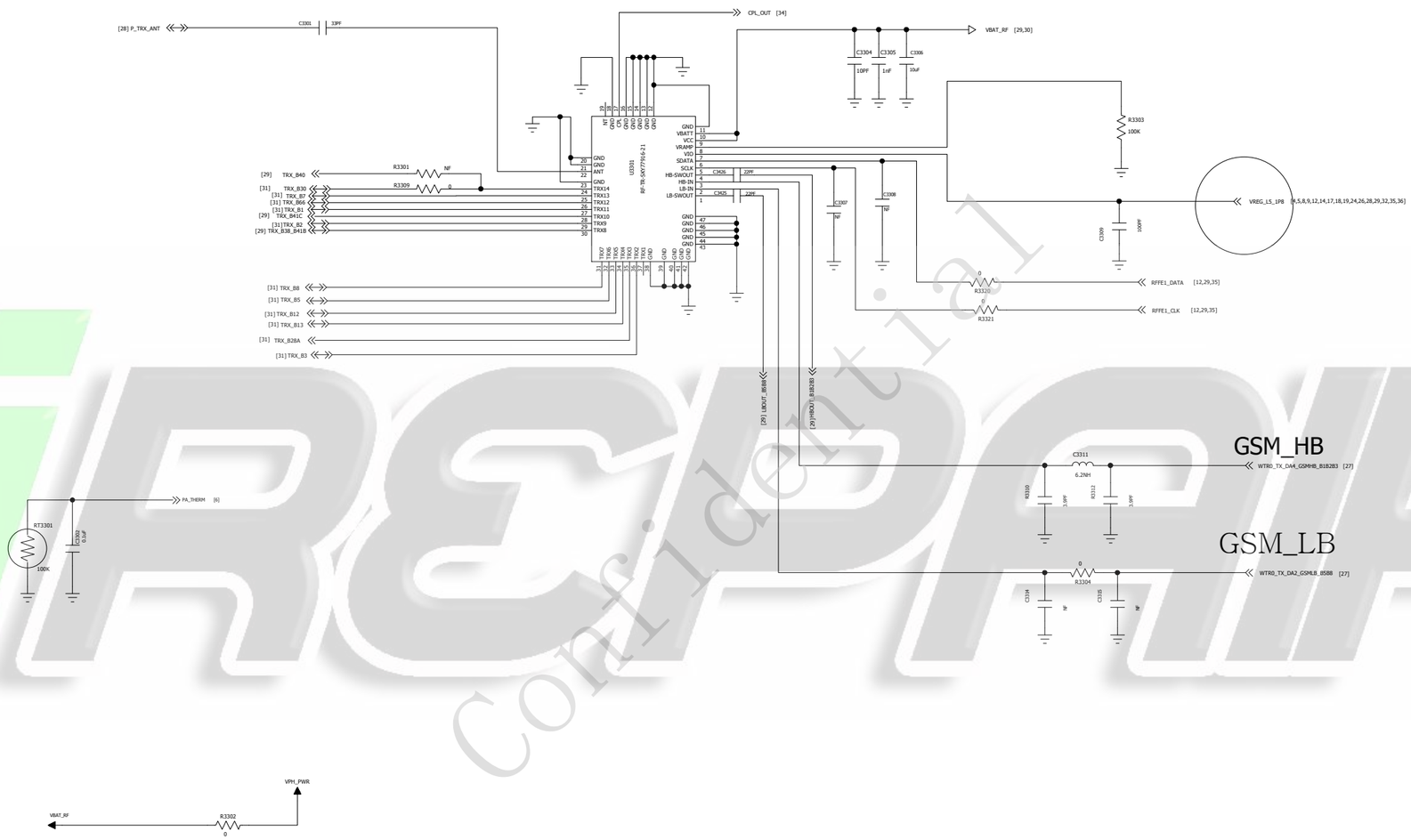

iREPAIR
Confidential

Title
Sheet
Size Name Rev
Date: Sheet of

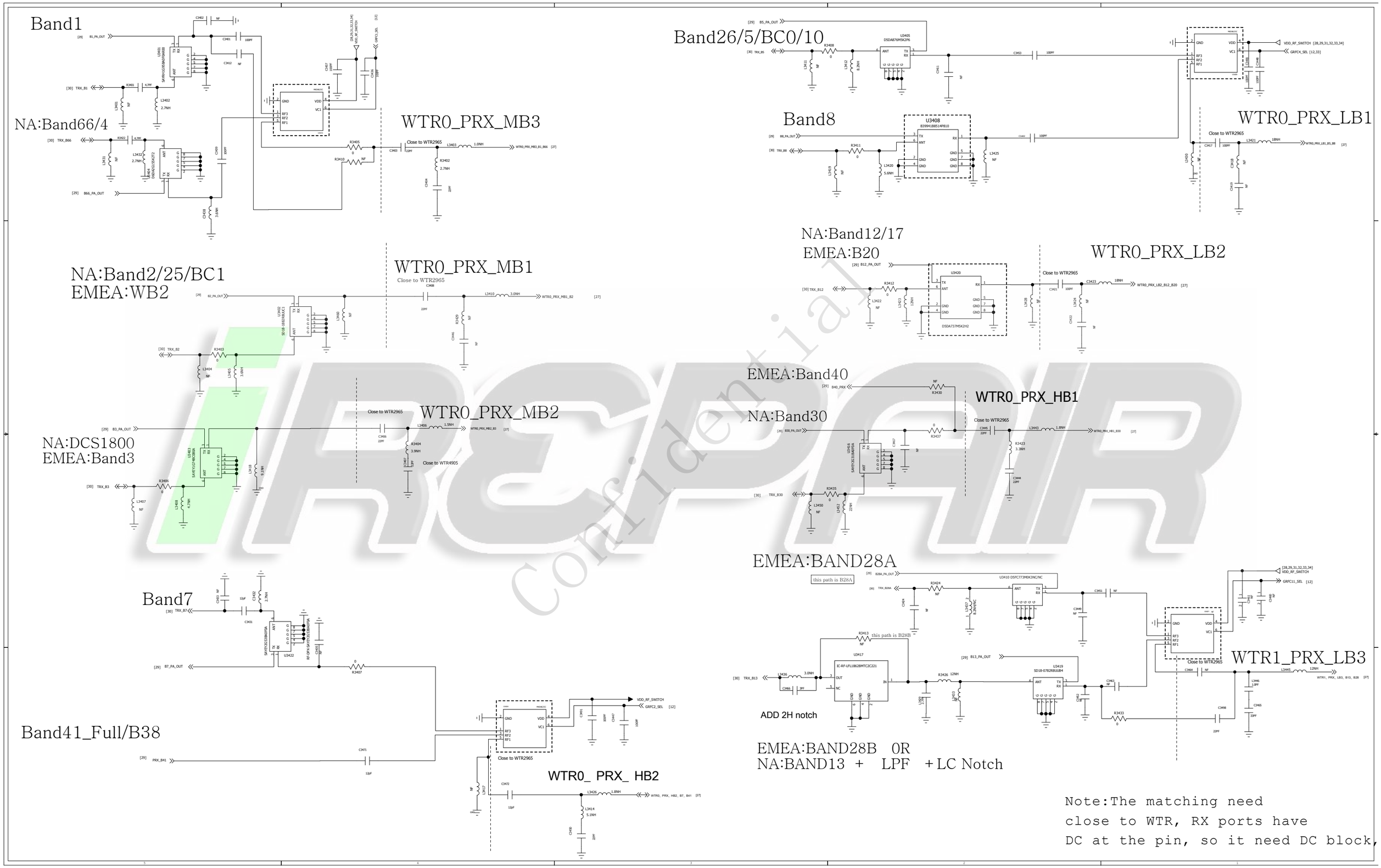

Note:The matching need
close to WTR, RX ports have
DC at the pin, so it need DC block,

Confidential

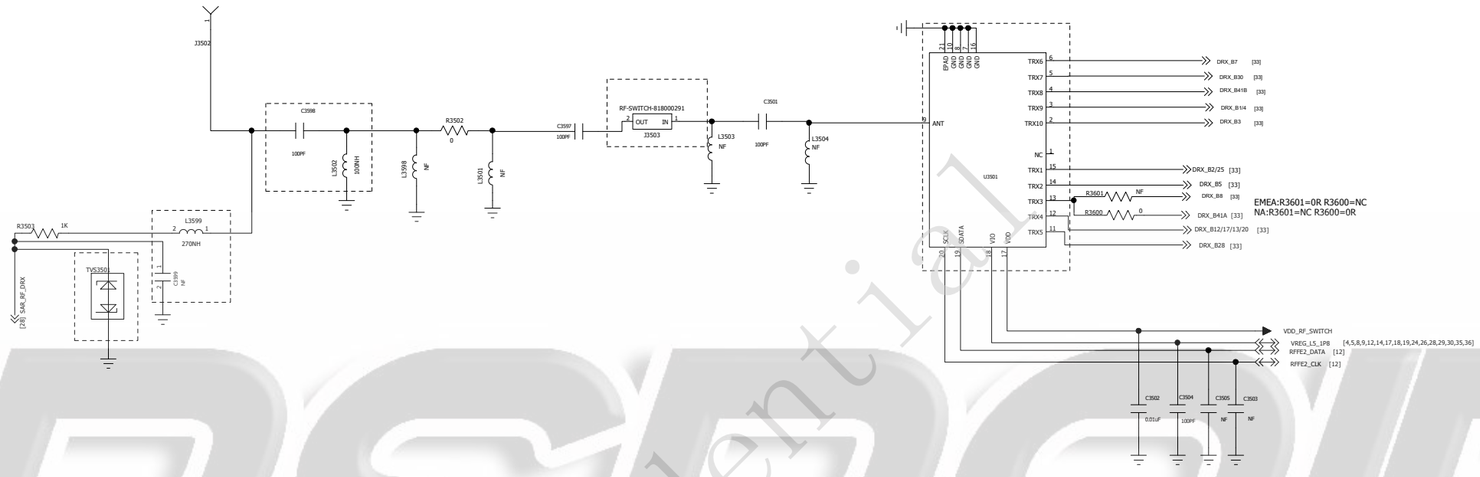

iREPAIR
Confidential

Title

Size | Sheet Name | Rev

Date: | Sheet of

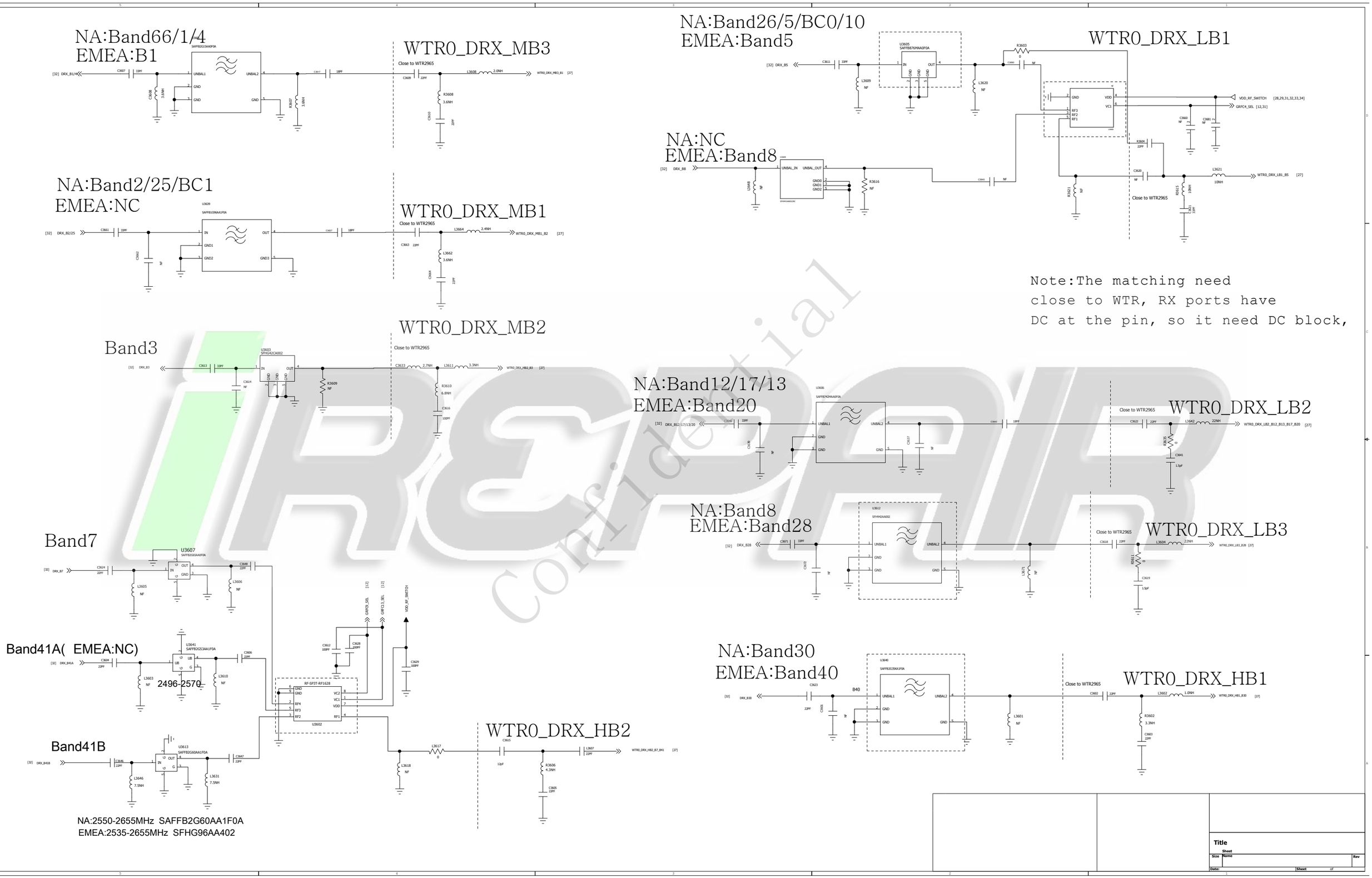

Confidential

SPDT

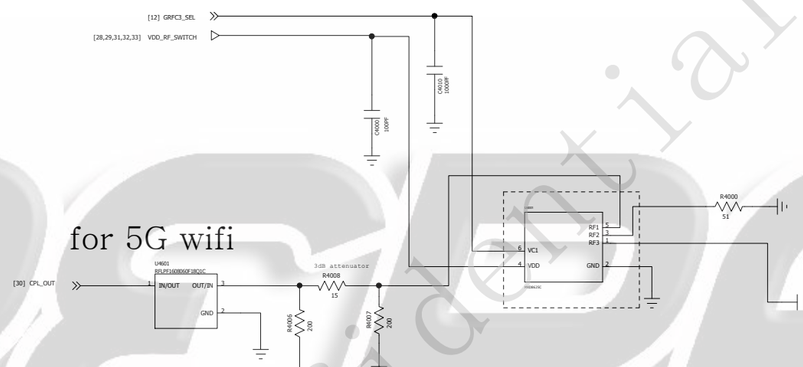

for 5G wifi

iRepair
Confidential

QUALCOMM Technologies, Inc.
5775 Morehouse Drive
San Diego, CA 92121-1714
U.S.A.

Title

Size | Name | Rev

Date: | Sheet of

Note: Use a signle low impedance power plane/fill VPA for all ET PA VCC1/VCC2.

Refer to 80-NA681-91 rev.B or later revisions for more layout details.

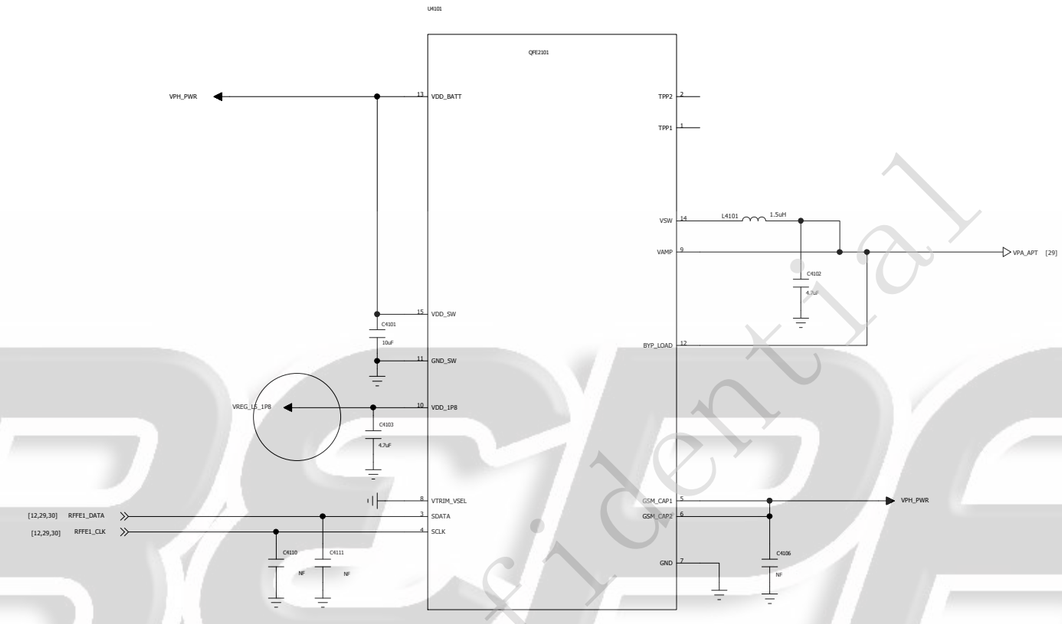

iPSPOID REPAIR
Confidential

Title

Size | Sheet Name | Rev

Date: | Sheet of

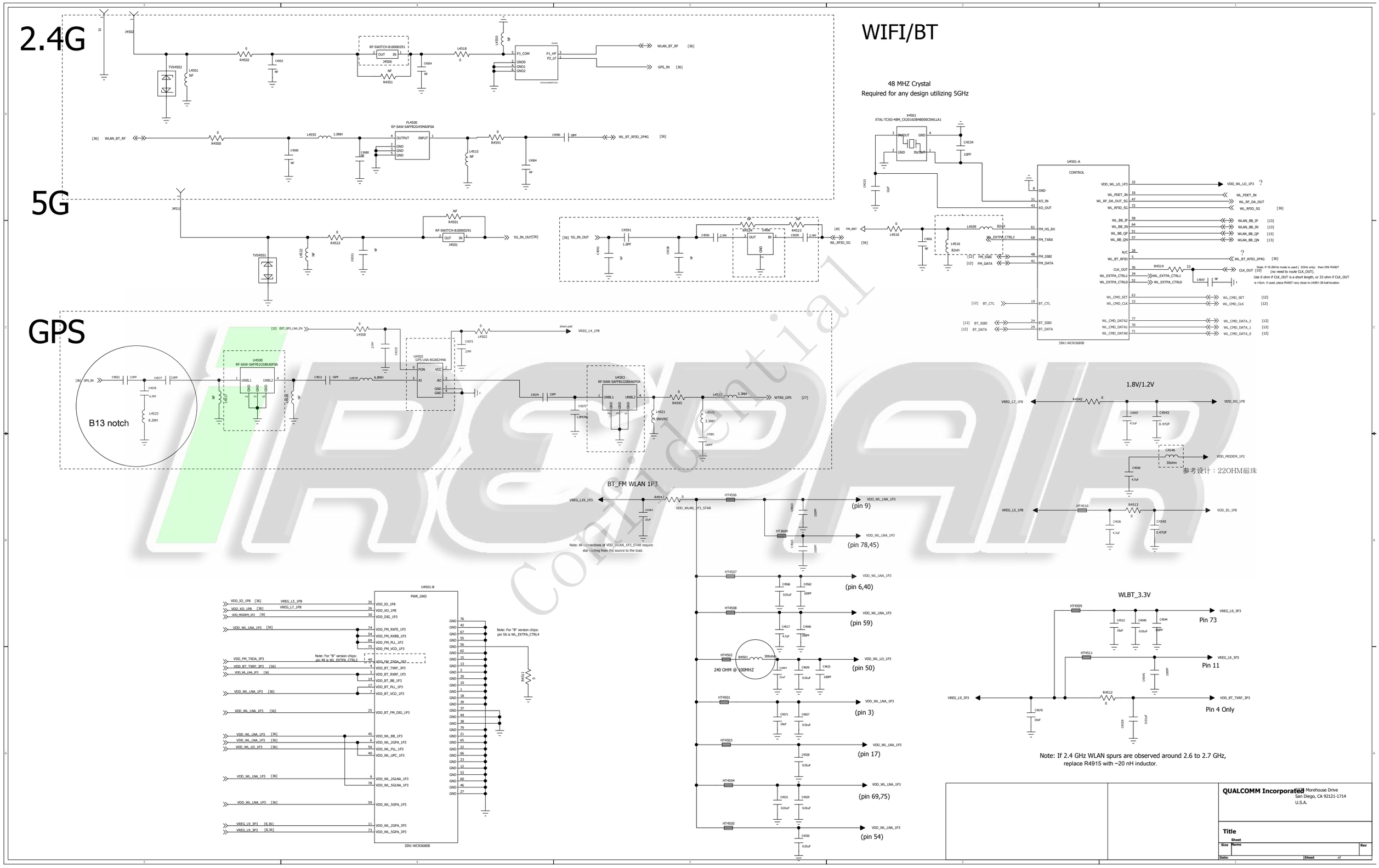
2.4G
WIFI/BT
5G
GPS
B13 notch
48 MHZ Crystal
Required for any design utilizing 5GHz
1.8V/1.2V
BT_FM WLAN 1P3
WLBT_3.3V
Pin 73
Pin 11
Pin 4 Only
Note: If 2.4 GHz WLAN spurs are observed around 2.6 to 2.7 GHz, replace R4915 with ~20 nH inductor.
参考设计：22OHM磁珠
240 OHM @ 100MHZ
(pin 9)
(pin 78,45)
(pin 6,40)
(pin 59)
(pin 50)
(pin 3)
(pin 17)
(pin 69,75)
(pin 54)
QUALCOMM Incorporated
5775 Morehouse Drive
San Diego, CA 92121-1714
U.S.A.
Title
Size
Name
Rev
Date:
Sheet
of